DAB
WATER•TECHNOLOGY

SELF-PRIMING MULTISTAGE CENTRIFUGAL PUMPS

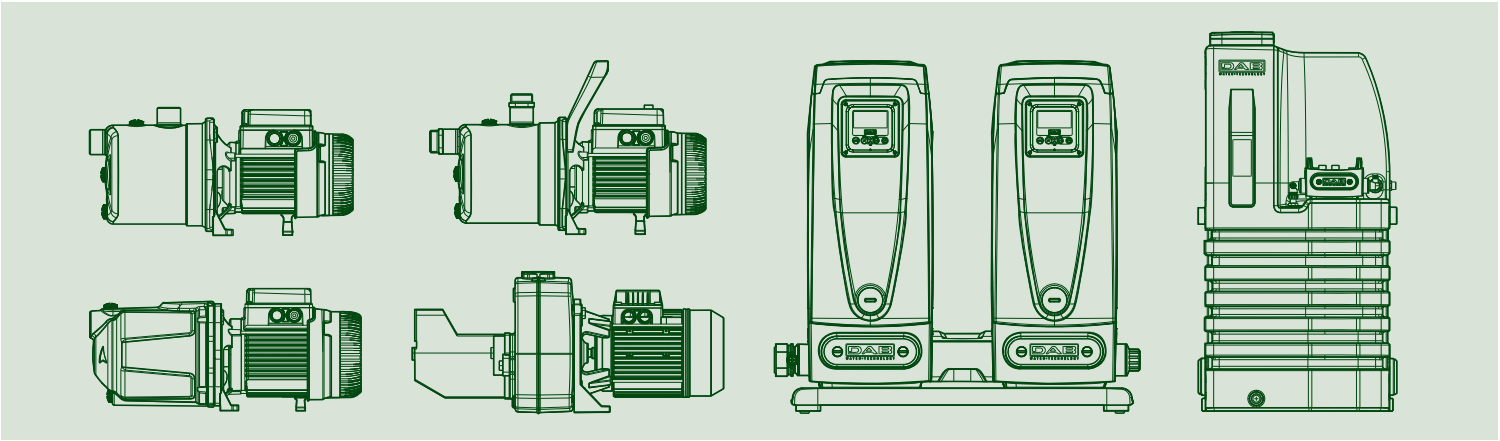

TECHNICAL CATALOGUE

CERTIFICATIONS

IQNet®

THE INTERNATIONAL CERTIFICATION NETWORK

CERTIFICATE

***CISQ/IMQ** has issued an IQNet recognized certificate that the organization:*

DWT HOLDING SPA

VIA MARCO POLO 14 - 35035 MESTRINO (PD)
BRENDOLA (VI) - CASTELLO DI GODEGO (TV) - BIENTINA (PI) -
VAL LIONA (VI) - PRC CHINA - HUNGARY

has implemented and maintains a

Quality Management System

for the following scope:

Design, production, sale and assistance of components and electronic controls for pumps, electropumps and pump sets for cold and hot water for civil, industrial and agricultural use

Further clarifications regarding the applicability of ISO 9001:2015 requirements may be obtained by consulting the organization

which fulfills the requirements of the following standard:

ISO 9001:2015

Issued on: **2018 - 05 - 21**
Expires on: **2021 - 05 - 27**

This attestation is directly linked to the IQNet Partner's original certificate and shall not be used as a stand-alone document

Registration Number: IT - 824

Alex Stoichitoiu
President of IQNET

Ing. Claudio Provetti
President of CISQ

IQNet Partners*:
AENOR *Spain* AFNOR Certification *France* APCER *Portugal* CCC *Cyprus* CISQ *Italy*
CQC *China* CQM *China* CQS *Czech Republic* Cro Cert *Croatia* DQS Holding GmbH *Germany* FCAV *Brazil*
FONDONORMA *Venezuela* ICONTEC *Colombia* Inspecta Sertifiointi Oy *Finland* INTECO *Costa Rica*
IRAM *Argentina* IQA *Japan* KFQ *Korea* MIRTEC *Greece* MSZT *Hungary* Nemko AS *Norway* NSAI *Ireland*
NYCE-SIGE *México* PCBC *Poland* Quality Austria *Austria* RR *Russia* SII *Israel* SIQ *Slovenia*
SIRIM QAS International *Malaysia* SQS *Switzerland* SRAC *Romania* TEST St Petersburg *Russia* TSE Turkey YUQS *Serbia*
IQNet is represented in the USA by: AFNOR Certification, CISQ, DQS Holding GmbH and NSAI Inc.

* The list of IQNet partners is valid at the time of issue of this certificate. Updated information is available under www.iqnet-certification.com

All. 1 di 1
Ann. 1 of 1

CISQ

www.imq.it

CISQ is a member of IQNet
THE INTERNATIONAL CERTIFICATION NETWORK
www.iqnet-certification.com

IQNet, the association of the world's first class certification bodies, is the largest provider of management System Certification in the world.
IQNet is composed of more than 30 bodies and counts over 150 subsidiaries all over the globe.

ALLEGATO CERTIFICATO n. **9101.COGE**

ANNEX CERTIFICATE

(*) Unità Operative:
(*) Operative Units:

DAB PUMPS SPA
VIA BONANNO PISANO 1 - 56031 BIENTINA (PI)

DAB PUMPS SPA
VIA DEL LAVORO 3 - 36040 VAL LIONA (VI)

DAB PUMPS QINGDAO CO. LTD
40 KAITUO ROAD, QINGDAO DEVELOPMENT ZONE - SHANGDONG PROVINCE, PRC CHINA

DAB PUMPS HUNGARY KFT
BUDA ERNO H - 8800 NAGYKANISZA HUNGARY

DATE:	PRIMA CERTIFICAZIONE *FIRST CERTIFICATION*	EMISSIONE CORRENTE *CURRENT ISSUE*	SCADENZA *EXPIRY*
	1995-07-17	2018-05-21	2021-05-27

IMQ S.p.A. - VIA QUINTILIANO, 43 - 20138 MILANO ITALY
Management Systems Division - Flavio Omago

ACCREDIA
SGQ N° 005 A

IAF: 18, 19, 29

IMQ
Organismo di Certificazione Federato CISQ
www.imq.it

FEDERAZIONE CISQ
www.cisq.com

CISQ

www.imq.it

CISQ is a member of IQNet
THE INTERNATIONAL CERTIFICATION NETWORK
www.iqnet-certification.com

IQNet, the association of the world's first class certification bodies, is the largest provider of management System Certification in the world.
IQNet is composed of more than 30 bodies and counts over 150 subsidiaries all over the globe.

CERTIFICATO N.
CERTIFICATE N. **9101.COGE**

SI CERTIFICA CHE IL SISTEMA QUALITA' DI
WE HEREBY CERTIFY THAT THE QUALITY SYSTEM OPERATED BY

DWT HOLDING SPA

VIA MARCO POLO 14 - 35035 MESTRINO (PD)

UNITA' OPERATIVE / *OPERATIVE UNITS*

DAB PUMPS SPA
VIA MARCO POLO 14 - 35035 MESTRINO (PD)
DAB PUMPS SPA
VIA EINAUDI 2 - 36040 BRENDOLA (VI)
DAB PUMPS SPA
VIA E. FERMI 6-8-10 - 31030 CASTELLO DI GODEGO (TV)

Vedere gli Allegati per le altre Unità Operative (n° 1 pagina)
View the Annexes for the other Operative Units (n° 1 page)

E' CONFORME ALLA NORMA / *IS IN COMPLIANCE WITH THE STANDARD*

ISO 9001:2015

PER LE SEGUENTI ATTIVITA' / *FOR THE FOLLOWING ACTIVITIES*

Progettazione, produzione, commercializzazione e assistenza di componenti e controlli elettronici per pompe, elettropompe e gruppi di pompaggio per acqua fredda e calda ad uso civile, industriale ed agricolo
Design, production, sale and assistance of components and electronic controls for pumps, electropumps and pump sets for cold and hot water for civil, industrial and agricultural use

IL PRESENTE CERTIFICATO E' SOGGETTO AL RISPETTO DEL REGOLAMENTO PER LA CERTIFICAZIONE DEI SISTEMI DI GESTIONE
THE USE AND THE VALIDITY OF THE CERTIFICATE SHALL SATISFY THE REQUIREMENTS OF THE RULES FOR CERTIFICATION OF MANAGEMENT SYSTEMS

DATE:	PRIMA CERTIFICAZIONE *FIRST CERTIFICATION*	EMISSIONE CORRENTE *CURRENT ISSUE*	SCADENZA *EXPIRY*
	1995-07-17	2018-05-21	2021-05-27

IMQ S.p.A. - VIA QUINTILIANO, 43 - 20138 MILANO ITALY
Management Systems Division - Flavio Omago

ACCREDIA
SGQ N° 005 A

IAF: 18, 19, 29

IMQ
Organismo di Certificazione Federato CISQ
www.imq.it

FEDERAZIONE CISQ
www.cisq.com

CONTENTS

SELF-PRIMING AND MULTISTAGE CENTRIFUGAL PUMPS

JET
PAG. 3

JET 151-251-200-300
PAG. 9

JETINOX
PAG. 14

JETCOM
PAG. 20

DP
PAG. 26

GARDENJET
PAG. 29

GARDEN INOX
PAG. 33

GARDEN COM
PAG. 37

EURO
PAG. 41

EUROINOX
PAG. 46

EUROCOM
PAG. 51

MULTI INOX
PAG. 56

JET - JETINOX - EUROINOX M-P
PAG. 59

AQUAJET
PAG. 65

AQUAJETINOX
PAG. 69

ACTIVE SYSTEM
PAG. 73

BOOSTER SILENT
PAG. 79

ESIBOX MINI³
PAG. 84

ESIBOX
PAG. 86

NBB
PAG. 88

ACTIVE SWITCH
PAG. 92

AQUAPROF
PAG. 95

ACCESSORIES

PAG. 99

TECHNICAL APPENDIX

PAG. 109

JET

SELF-PRIMING CENTRIFUGAL PUMPS

TECHNICAL DATA

Operating range:
from 0.4 to 10.5 m^3/h with head up to 62 metres
Liquid quality requirements: clean, free from solid or abrasive contaminants, non-viscous, non-aggressive, uncrystallised and chemically neutral, close to the properties of water
Liquid temperature range:
for domestic use: from 0°C to +35°C (EN 60335-2-41)
for other use: from 0°C to +40°C
Maximum ambient temperature: +40°C
Maximum operating pressure: 8 bar (800 kPa)
Installation: fixed in a horizontal position
Special executions on request: different frequencies and/or voltage
Motor protection rating: IP 44
Terminal block protection rating: IP 55
Insulation class: F
Standard input voltage: single phase 220/240 V / 50 Hz
three phase 230/400 V - 50 Hz

APPLICATIONS

Self priming centrifugal pump with excellent suction capacity even in the presence of air bubbles.
Suitable for pumping water with low levels of sandy impurities.
Especially used in domestic water supply installations. Suitable for small farms and gardening, small scale industrial services and where self priming is necessary.

CONSTRUCTIONAL FEATURES OF THE PUMP

Cast-iron motor support and pump body.
Motor support in die cast aluminium.
Impeller, diffuser, venturi tube and sand guard in technopolymer
Stainless steel wear ring.
Carbon/ceramic mechanical seal.

CONSTRUCTIONAL FEATURES OF THE MOTOR

Asynchronous type, closed, with external air cooling.
Rotor mounted on oversized greased-for-life ball bearings, to guarantee low noise and long life.
Incorporated thermo-amperometric protection and permanently inserted capacitor in the single phase version.
It is recommended to use overload protection for three phase motor protection, in compliance with current legislation.
Manufactured pursuant to CEI 2-3 and CEI 61-69 (EN 60335-2-41).

DAB PUMPS reserve the right to make modifications without prior notice

MATERIALS

N°	PARTS *	MATERIALS
1	PUMP BODY	200 UNI ISO 185 CAST IRON
3	FRAME	DIE CAST ALUMINIUM
4	IMPELLER	TECHNOPOLYMER A
7	SHAFT WITH ROTOR	AISI 416 STAINLESS STEEL X12 CrS13 - UNI 6900/71
16	MECHANICAL SEAL	CARBON/CERAMIC
28	OR GASKET	NBR RUBBER
160	VENTURI DIFFUSER NOZZEL GROUP	TECHNOPOLYMER A

* In contact with liquid

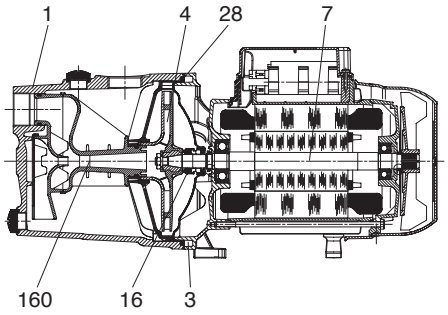

SELF PRIMING CAPACITY

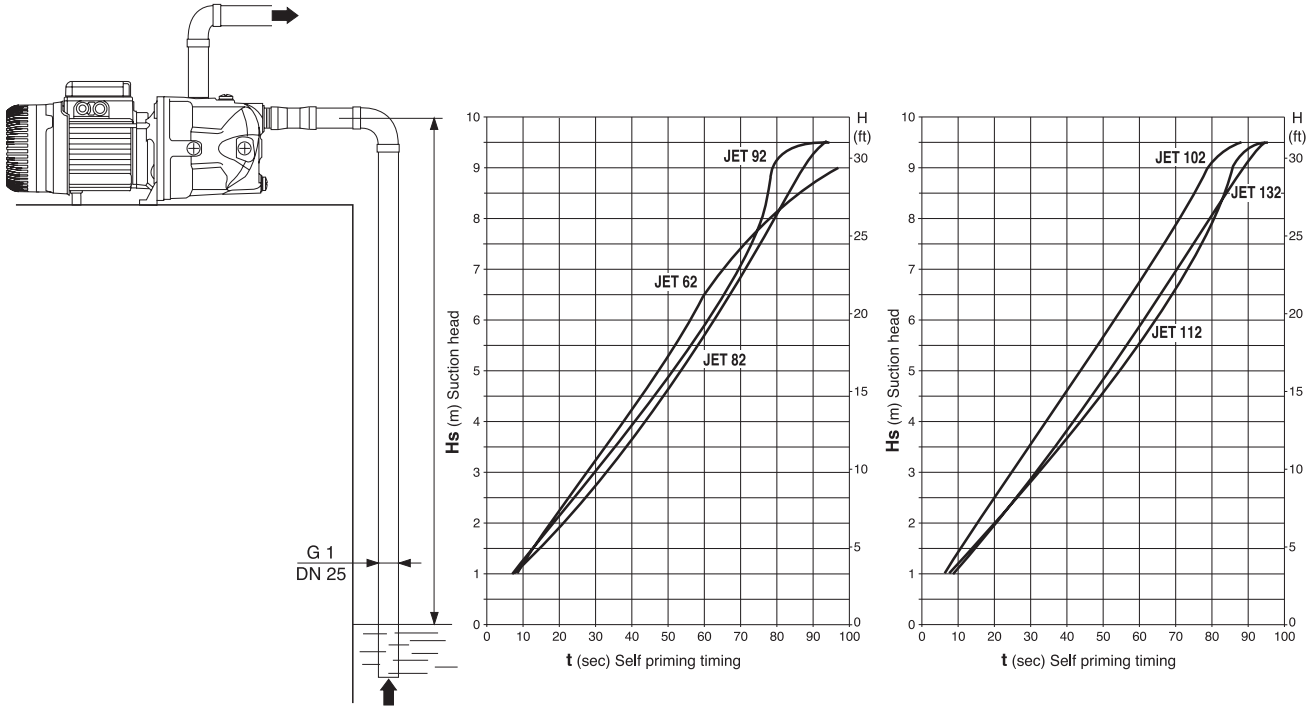

PERFORMANCE RANGE

The performance curves are based on kinematic viscosity values = 1 mm²/s and density equivalent to 1000 kg/m³. Curve tolerance according to ISO 9906.

GRAPHIC SELECTION TABLE

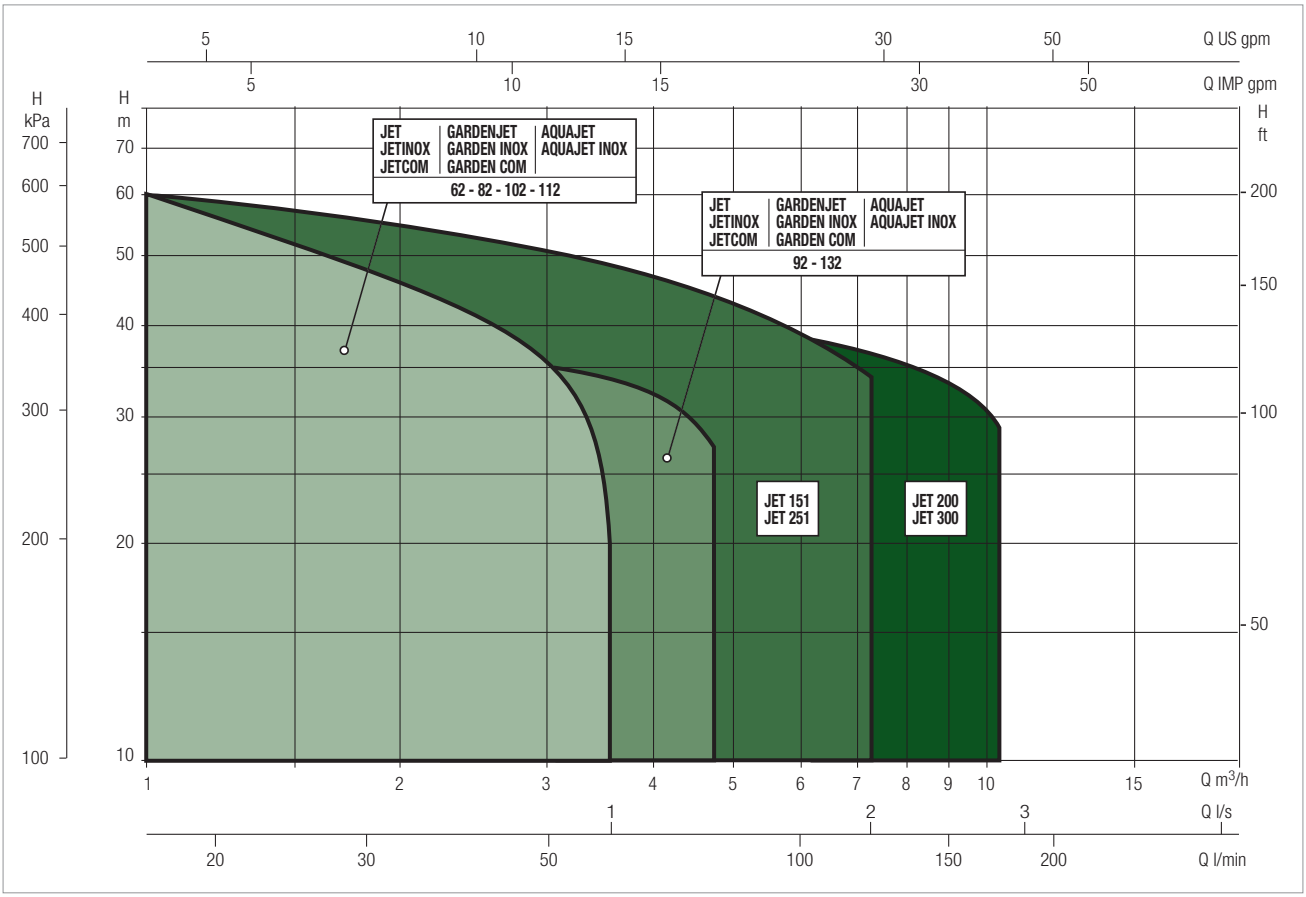

JET SELECTION TABLE

MODEL	Q=m³/h	0	0,6	1,2	1,8	2,4	3	3,6	4,2	4,8
	Q=l/min	0	10	20	30	40	50	60	70	80
JET 62 M	H (m)	42	35	29,2	25,6	22,9	21,1			
JET 82 M		47	40	34	30	26,2	23,5	20,3		
JET 82 T		47	40	34	30	26,2	23,5	20,3		
JET 102 M		53,8	47	41	36,3	32,4	28,8	25,8		
JET 102 T		53,8	47	41	36,3	32,4	28,8	25,8		
JET 112 M		61	54	47,8	42,8	38,8	34,8	20		
JET 112 T		61	54	47,8	42,8	38,8	34,8	20		
JET 92 M		36,2	33,5	31	28,4	26	24	21,8	19,6	17
JET 132 M		48,3	45,6	42,8	40	37,6	35	32,5	30	27,2
JET 132 T		48,3	45,6	42,8	40	37,6	35	32,5	30	27,2

DAB PUMPS reserve the right to make modifications without prior notice

JET 62 - SELF-PRIMING CENTRIFUGAL PUMPS

Liquid temperature range pumped: from 0 °C to +35 °C - Maximum ambient temperature: +40°C

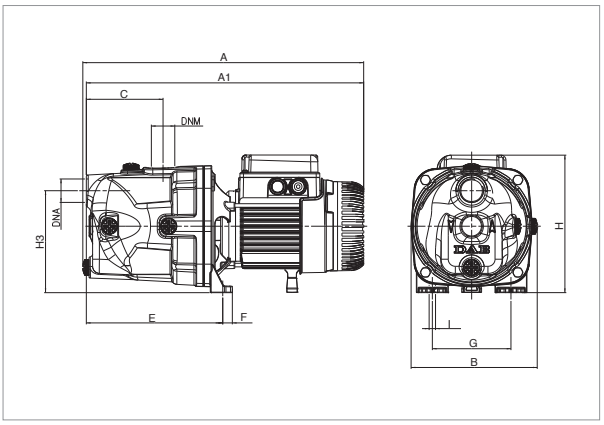

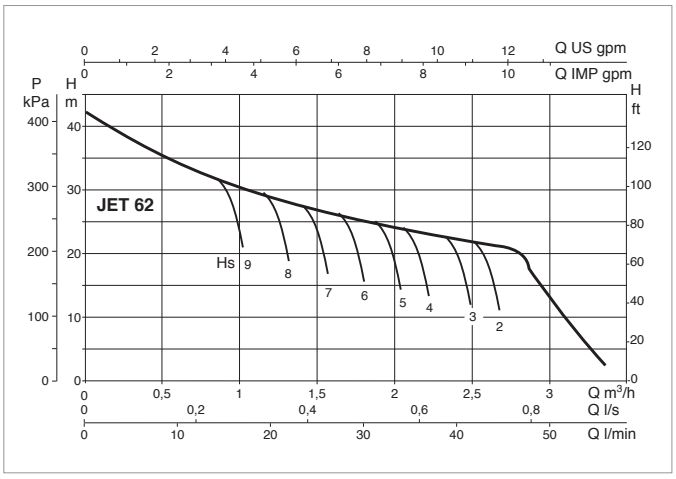

The performance curves are based on the kinematic viscosity values = 1 mm²/s and density equivalent to 1000 kg/m³. Curve tolerance according to ISO 9906.

MODEL	ELECTRICAL DATA						
	POWER SUPPLY 50 Hz	P1 MAX kW	P2 NOMINAL		In A	CAPACITOR	
			kW	HP		µF	Vc
JET 62 M	1 x 220 - 240 V ~	0,72	0,44	0,6	3,12	12,5	450

MODEL	A	A1	B	C	E	F	G	H	H1	H2	H3	I Ø	DNA	DNM	PACKING DIMENSIONS			VOLUME (mc)	GROSS WEIGHT Kg
															L/A	L/B	H		
JET 62 M	395	390	178	108	192	14	111	193	-	-	144	9	1"	1"	470	240	240	0,022	10,5

JET 82 - SELF-PRIMING CENTRIFUGAL PUMPS

Liquid temperature range pumped: from 0 °C to +35 °C - Maximum ambient temperature: +40°C

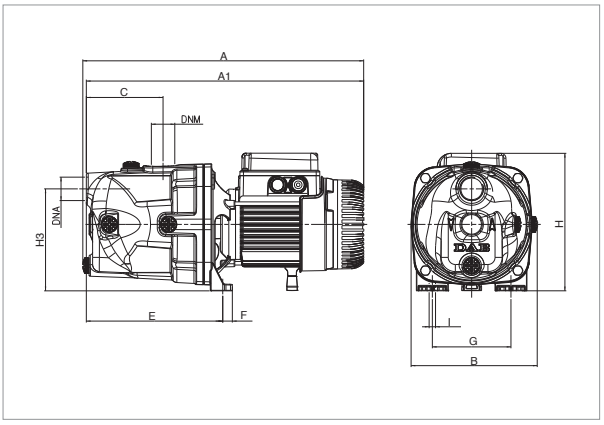

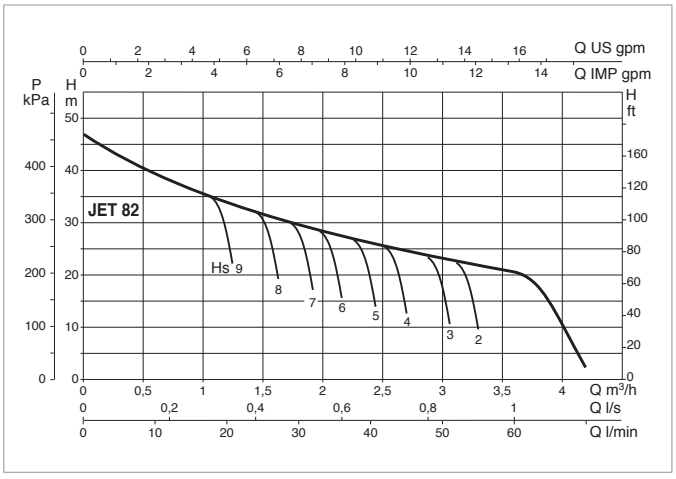

The performance curves are based on the kinematic viscosity values = 1 mm²/s and density equivalent to 1000 kg/m³. Curve tolerance according to ISO 9906.

MODEL	ELECTRICAL DATA						
	POWER SUPPLY 50 Hz	P1 MAX kW	P2 NOMINAL		In A	CAPACITOR	
			kW	HP		µF	Vc
JET 82 M	1 x 220 - 240 V ~	0,85	0,6	0,8	3,8	12,5	450
JET 82 T	3 x 230 - 400 V ~	0,86	0,6	0,8	2,8-1,6	-	-

MODEL	A	A1	B	C	E	F	G	H	H1	H2	H3	I Ø	DNA	DNM	PACKING DIMENSIONS			VOLUME (mc)	GROSS WEIGHT Kg
															L/A	L/B	H		
JET 82 M	395	395	178	108	192	14	111	193	-	-	144	9	1"	1"	470	240	240	0,022	10,7
JET 82 T	395	395	178	108	192	14	111	193	-	-	144	9	1"	1"	470	240	240	0,022	10,7

JET 102 - SELF-PRIMING CENTRIFUGAL PUMPS

Liquid temperature range pumped: from 0 °C to +35 °C - Maximum ambient temperature: +40°C

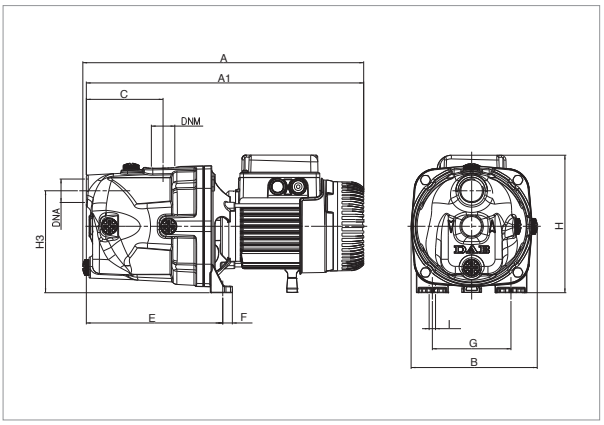

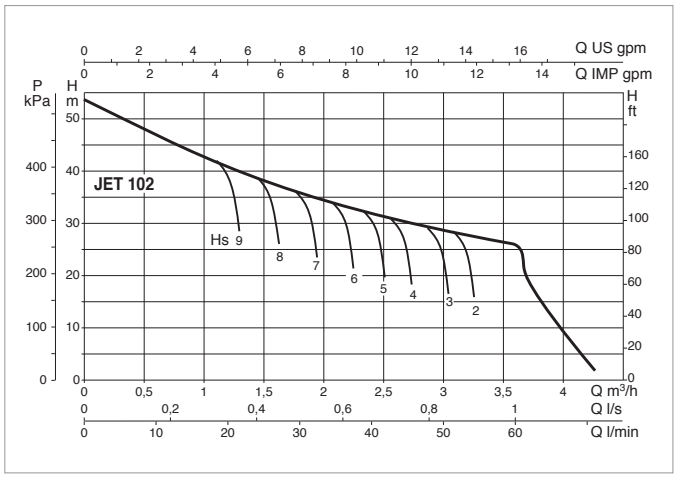

The performance curves are based on the kinematic viscosity values = 1 mm²/s and density equivalent to 1000 kg/m³. Curve tolerance according to ISO 9906.

MODEL	ELECTRICAL DATA							
	POWER SUPPLY 50 Hz	MOTOR TYPE	P1 MAX kW	P2 NOMINAL		In A	CAPACITOR	
				kW	HP		µF	Vc
JET 102 M	1 x 220 - 240 V ~	-	1,13	0,75	1	5,1	16	450
JET 102 T	3 x 230 - 400 V ~	IE3	1,03	0,75	1	3,4-2	-	-
JET 102 T	3 x 230 - 400 V ~	IE2	1,04	0,75	1	3,3-1,9	-	-

MODEL	A	A1	B	C	E	F	G	H	H1	H2	H3	I Ø	DNA	DNM	PACKING DIMENSIONS			VOLUME (mc)	GROSS WEIGHT Kg
															L/A	L/B	H		
JET 102 M	414	409	178	108	197	14	111	203	-	-	144	9	1"	1"	470	240	240	0,022	12,5
JET 102 T	414	409	178	108	197	14	111	203	-	-	144	9	1"	1"	470	240	240	0,022	12,5

JET 112 - SELF-PRIMING CENTRIFUGAL PUMPS

Liquid temperature range pumped: from 0 °C to +35 °C - Maximum ambient temperature: +40°C

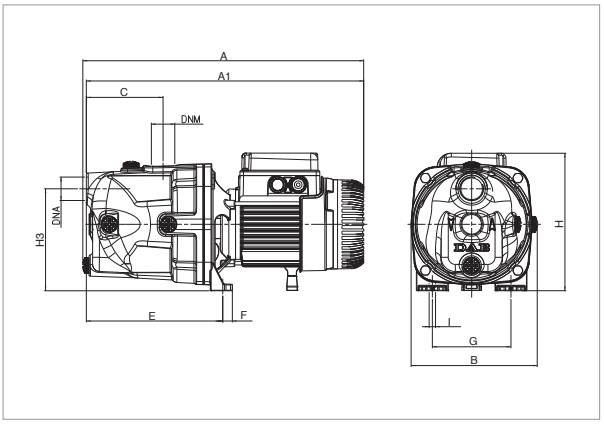

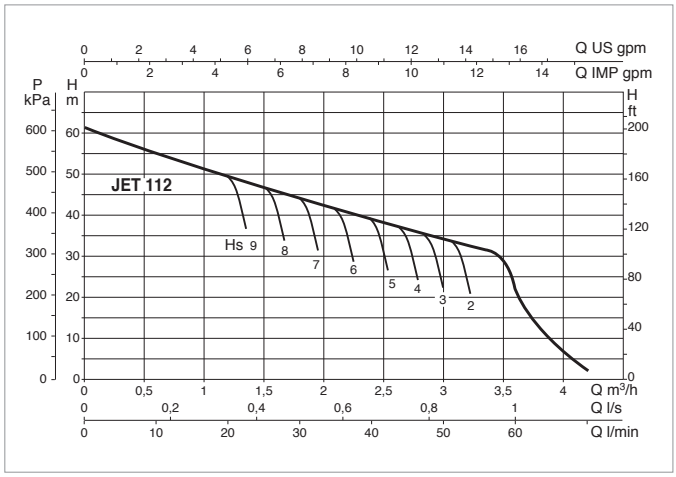

The performance curves are based on the kinematic viscosity values = 1 mm²/s and density equivalent to 1000 kg/m³. Curve tolerance according to ISO 9906.

MODEL	ELECTRICAL DATA							
	POWER SUPPLY 50 Hz	MOTOR TYPE	P1 MAX kW	P2 NOMINAL		In A	CAPACITOR	
				kW	HP		µF	Vc
JET 112 M	1 x 220 - 240 V ~	-	1,4	1	1,36	6,2	25	450
JET 112 T	3 x 230 - 400 V ~	IE3	1,3	1	1,36	4,1-2,4	-	-
JET 112 T	3 x 230 - 400 V ~	IE2	1,35	1	1,36	4,3-2,5	-	-

MODEL	A	A1	B	C	E	F	G	H	H1	H2	H3	I Ø	DNA	DNM	PACKING DIMENSIONS			VOLUME (mc)	GROSS WEIGHT Kg
															L/A	L/B	H		
JET 112 M	414	409	178	108	192	14	111	203	-	-	144	9	1"	1"	470	240	240	0,022	13,5
JET 112 T	430	409	178	108	192	14	111	203	-	-	144	9	1"	1"	470	240	240	0,022	13,5

JET 92 - SELF-PRIMING CENTRIFUGAL PUMPS

Liquid temperature range pumped: from 0 °C to +35 °C - Maximum ambient temperature: +40°C

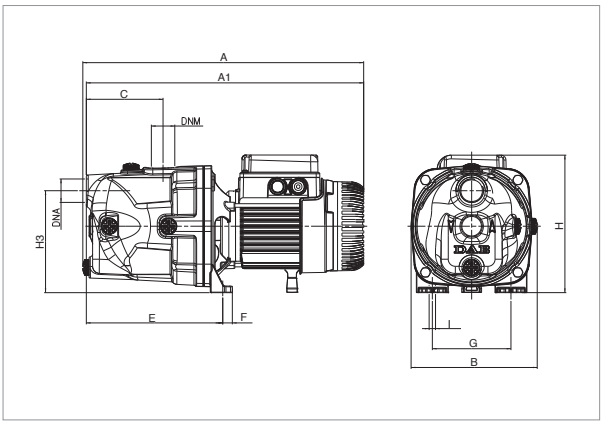

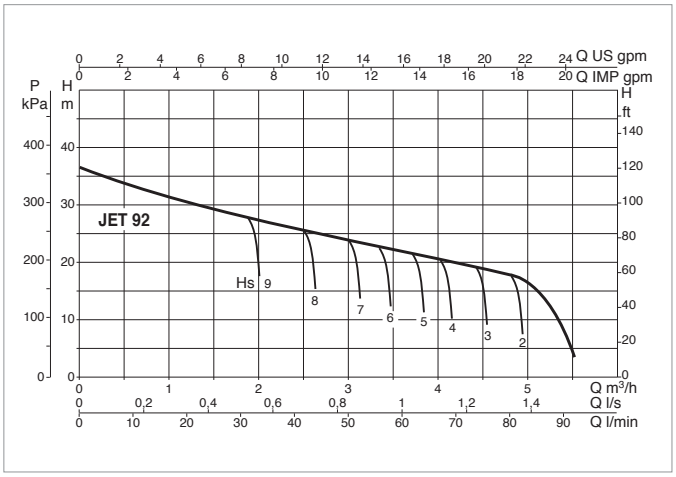

The performance curves are based on the kinematic viscosity values = 1 mm²/s and density equivalent to 1000 kg/m³. Curve tolerance according to ISO 9906.

MODEL	ELECTRICAL DATA						
	POWER SUPPLY 50 Hz	P1 MAX kW	P2 NOMINAL		In A	CAPACITOR	
			kW	HP		µF	Vc
JET 92 M	1 x 220 - 240 V ~	0,94	0,75	1	4,2	14	450

MODEL	A	A1	B	C	E	F	G	H	H1	H2	H3	I Ø	DNA	DNM	PACKING DIMENSIONS			VOLUME (mc)	GROSS WEIGHT Kg
															L/A	L/B	H		
JET 92 M	395	390	178	108	192	14	111	193	-	-	144	9	1"	1"	470	240	240	0,022	11,7

JET 132 - SELF-PRIMING CENTRIFUGAL PUMPS

Liquid temperature range pumped: from 0 °C to +35 °C - Maximum ambient temperature: +40°C

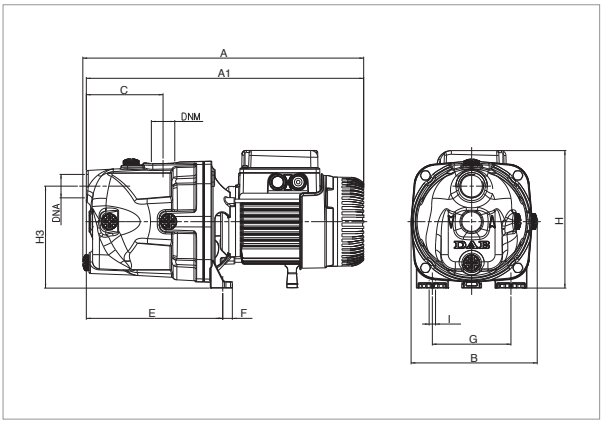

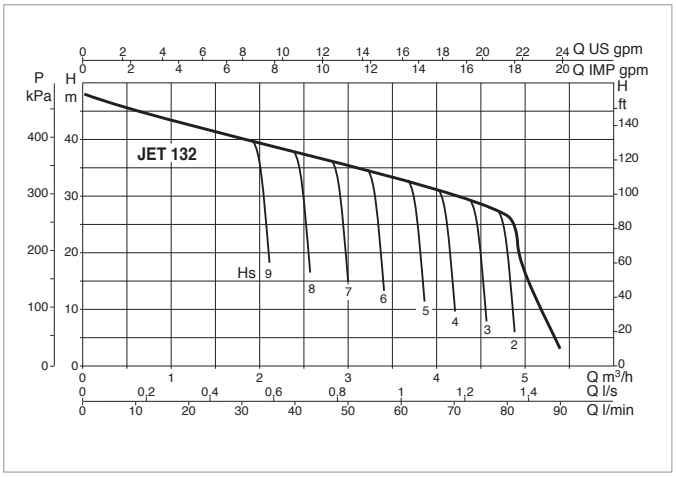

The performance curves are based on the kinematic viscosity values = 1 mm²/s and density equivalent to 1000 kg/m³. Curve tolerance according to ISO 9906.

MODEL	ELECTRICAL DATA							
	POWER SUPPLY 50 Hz	MOTOR TYPE	P1 MAX kW	P2 NOMINAL		In A	CAPACITOR	
				kW	HP		µF	Vc
JET 132 M	1 x 220 - 240 V ~	-	1,49	1	1,36	6,6	25	450
JET 132 T	3 x 230 - 400 V ~	IE3	1,37	1	1,36	4,3-2,5	-	-
JET 132 T	3 x 230 - 400 V ~	IE2	1,43	1	1,36	4,7-2,7	-	-

MODEL	A	A1	B	C	E	F	G	H	H1	H2	H3	I Ø	DNA	DNM	PACKING DIMENSIONS			VOLUME (mc)	GROSS WEIGHT Kg
															L/A	L/B	H		
JET 132 M	414	409	263	108	192	14	111	203	-	-	144	9	1"	1"	470	240	240	0,022	13,5
JET 132 T	430	409	263	108	192	14	111	203	-	-	144	9	1"	1"	470	240	240	0,022	13,5

JET 151-251-200-300

SELF-PRIMING CENTRIFUGAL PUMPS

JET 151-251

JET 200-300

TECHNICAL DATA

Operating range:
from 0.4 to 10.5 m^3/h with head up to 62 metres
Liquid quality requirements: clean, free from solid or abrasive contaminants, non-viscous, non-aggressive, uncrystallised and chemically neutral, close to the properties of water
Liquid temperature range:
for domestic use: from 0°C to +35°C (EN 60335-2-41)
for other use: from 0°C to +40°C
Maximum ambient temperature: +40°C
Maximum operating pressure: 8 bar (800 kPa)
Installation: fixed in a horizontal position
Special executions on request: different frequencies and/or voltage
Motor protection rating: IP 44
Terminal block protection rating: IP 55
Insulation class: F
Standard input voltage: single phase 220/240 V / 50 Hz
three phase 230/400 V - 50 Hz

APPLICATIONS

Self priming centrifugal pump with excellent suction capacity even in the presence of air bubbles.
Suitable for pumping water with low levels of sandy impurities.
Especially used in domestic water supply installations.
Suitable for small farms and gardening, small scale industrial services and where self priming is necessary.

CONSTRUCTIONAL FEATURES OF THE PUMP

Cast-iron motor support and pump body.
Impeller, diffuser, venturi tube and sand guard in technopolymer
Twin impeller on the JET 151 and 251 versions.
Stainless steel wear ring.
Carbon/ceramic mechanical seal.

CONSTRUCTIONAL FEATURES OF THE MOTOR

Asynchronous type, closed, with external air cooling.
Rotor mounted on oversized greased-for-life ball bearings, to guarantee low noise and long life.
Incorporated thermo-amperometric protection and permanently inserted capacitor in the single phase version.
It is recommended to use overload protection for three phase motor protection, in compliance with current legislation.
Manufactured pursuant to CEI 2-3 and CEI 61-69 (EN 60335-2-41).

DAB PUMPS reserve the right to make modifications without prior notice

JET 151-251-200-300

SELF-PRIMING CENTRIFUGAL PUMPS

MATERIALS

N°	PARTS*	MATERIALS
1	PUMP BODY	GJL 200 UNI EN 1561 CAST IRON
3	FRAME	GJL 200 UNI EN 1561 CAST IRON
4	IMPELLER	PPO-GF 20 (NorylTM)
7	SHAFT WITH ROTOR	AISI 303 STAINLESS STEEL X8CrNiS18-9 UNI EN 10088 (UNI 6900: 71)
8-9	VENTURI DIFFUSER NOZZLE GROUP	PPO-GF 20 (NorylTM)
16	MECHANICAL SEAL	CARBON/CERAMIC
28	OR GASKET	NBR RUBBER

* In contact with liquid

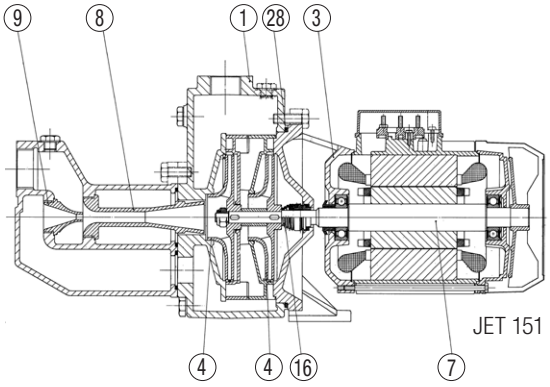

JET 151

MATERIALS

N°	PARTS*	MATERIALS
1	PUMP BODY	GJL 200 UNI EN 1561 CAST IRON
3	FRAME	GJL 200 UNI EN 1561 CAST IRON
4	IMPELLER	PPO-GF 20 (NorylTM)
7	SHAFT WITH ROTOR	AISI 303 STAINLESS STEEL X8CrNiS18-9 UNI EN 10088 (UNI 6900: 71)
8-9	VENTURI DIFFUSER NOZZLE GROUP	PPO-GF 20 (NorylTM)
16	MECHANICAL SEAL	CARBON/CERAMIC
28	OR GASKET	NBR RUBBER

* In contact with liquid

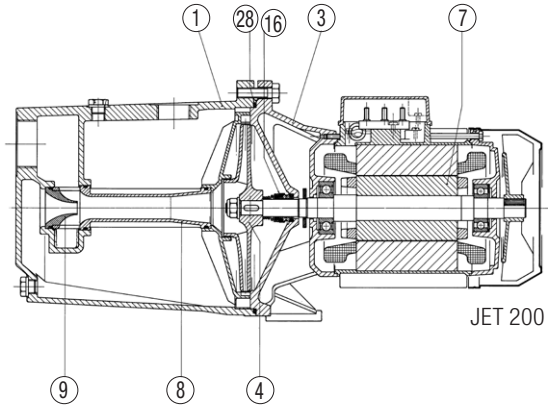

JET 200

JET 151-251-200-300

SELF-PRIMING CENTRIFUGAL PUMPS

PERFORMANCE RANGE

The performance curves are based on kinematic viscosity values = 1 mm²/s and density equivalent to 1000 kg/m³. Curve tolerance according to ISO 9906.

GRAPHIC SELECTION TABLE

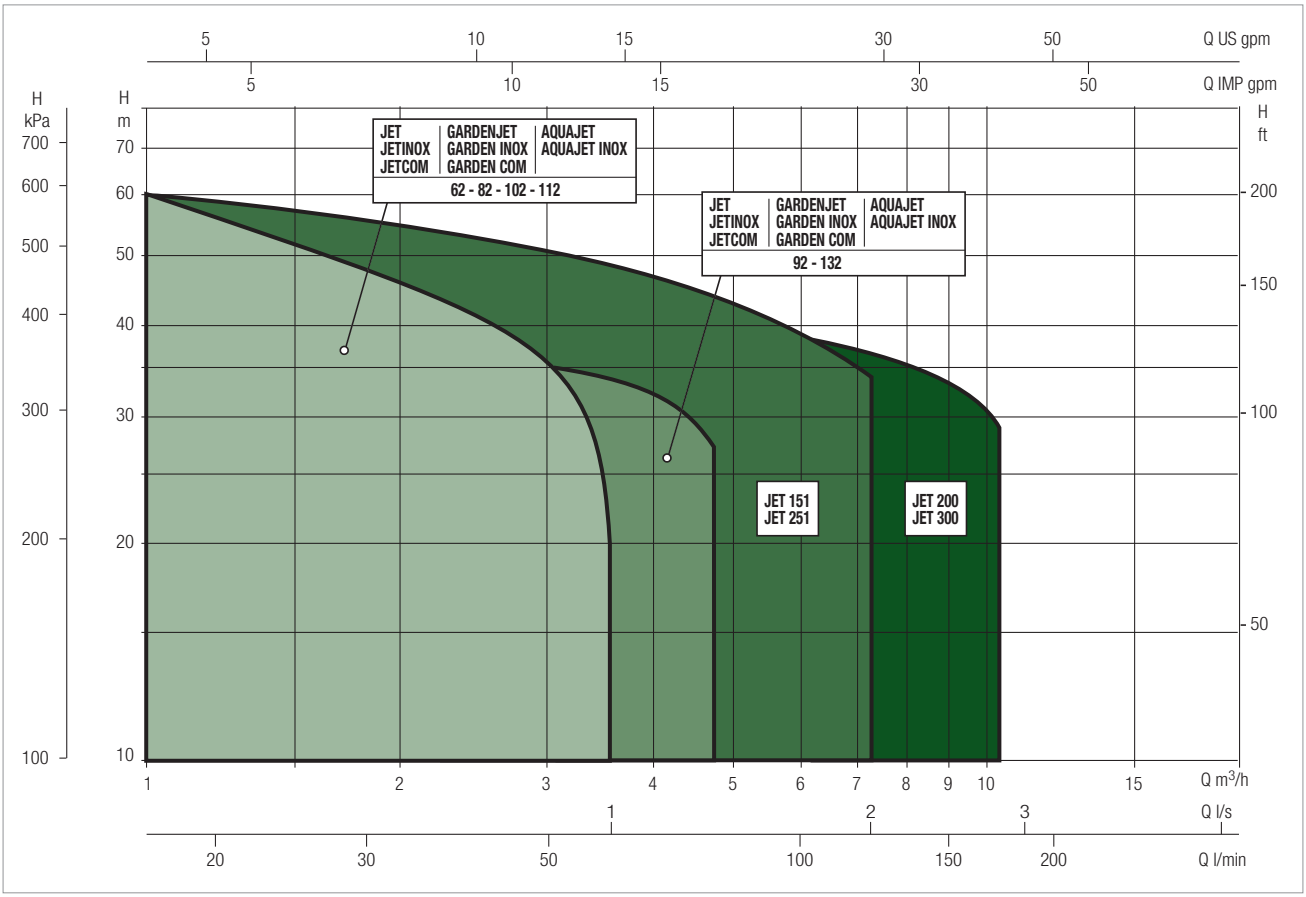

SELECTION TABLE - JET 151-251-200-300

MODEL	Q=m³/h	0	0,6	1,2	1,8	2,4	3,0	3,6	4,2	4,8	6	7,2	9	9,6	10,5
	Q=l/min	0	10	20	30	40	50	60	70	80	100	120	150	160	175
JET 151 M	H (m)	61	58,2	56	53	50	46	43	36						
JET 151 T		61	58,2	56	53	50	46	43	36						
JET 200 M		41			37,5	36,5	35,2	34	33	31,8	29,5	27,2	24	22,8	21,3
JET 200 T		41			37,5	36,5	35,2	34	33	31,8	29,5	27,2	24	22,8	21,3
JET 251 M		62	60	58	56	54	51	48,5	46	43,5	39	34,2			
JET 251 T		62	60	58	56	54	51	48,5	46	43,5	39	34,2			
JET 300 M		51			48	47	46	44,5	43	42	40	37	33	32	29
JET 300 T		51			48	47	46	44,5	43	42	40	37	33	32	29

JET 151 - SELF-PRIMING CENTRIFUGAL PUMPS

Liquid temperature range pumped: from 0 °C to +35 °C - Maximum ambient temperature: +40°C

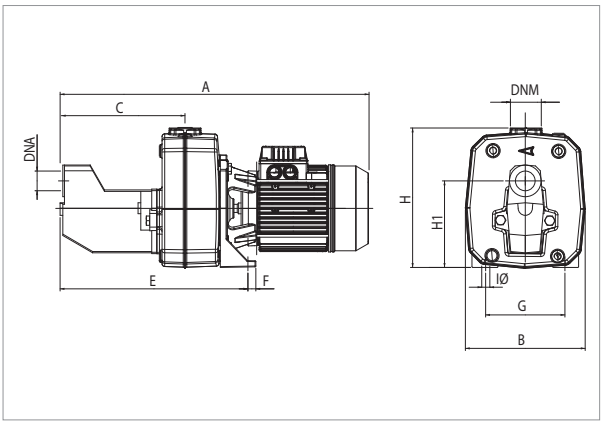

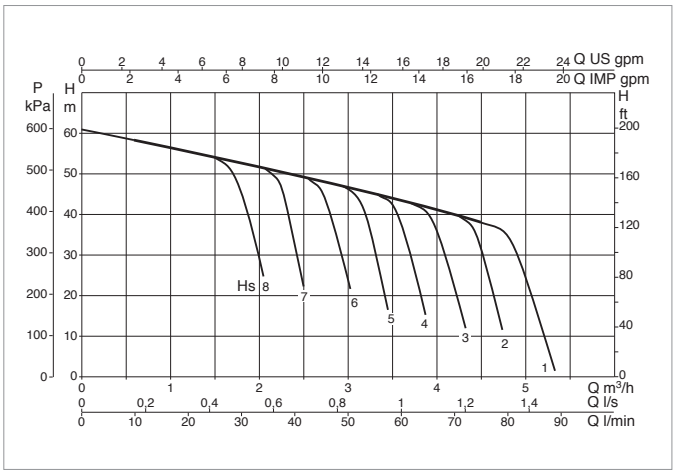

The performance curves are based on the kinematic viscosity values = 1 mm²/s and density equivalent to 1000 kg/m³. Curve tolerance according to ISO 9906.

MODEL	ELECTRICAL DATA							
	POWER SUPPLY 50 Hz	MOTOR TYPE	P1 MAX kW	P2 NOMINAL		In A	CAPACITOR	
				kW	HP		µF	Vc
JET 151 M	1 x 220 - 240 V ~		1,6	1,1	1,5	7,2	31,5	450
JET 151 T	3 x 230 - 400 V ~	IE3	1,56	1,1	1,5	5,5-3,2	-	-
JET 151 T	3 x 230 - 400 V ~	IE2	1,6	1,1	1,5	5,2-3	-	-

MODEL	A	A1	B	C	E	F	G	H	H1	H2	H3	I Ø	DNA	DNM	PACKING DIMENSIONS			VOLUME (mc)	GROSS WEIGHT Kg
															L/A	L/B	H		
JET 151 M - T	558	-	210	221	350	20	145	255	158	-	-	11	1 ¼"	1 "	612	248	279	0,042	31

JET 200 - SELF-PRIMING CENTRIFUGAL PUMPS

Liquid temperature range pumped: from 0 °C to +35 °C - Maximum ambient temperature: +40°C

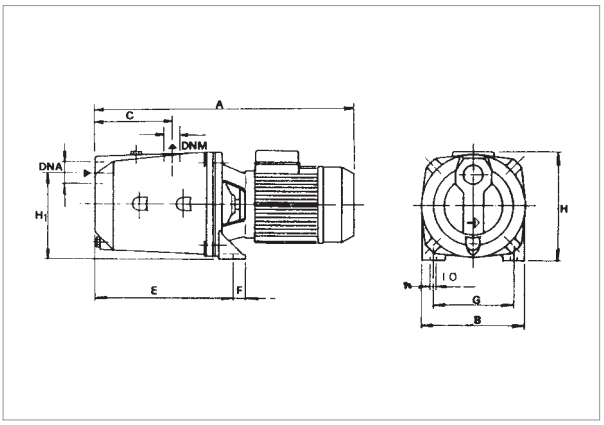

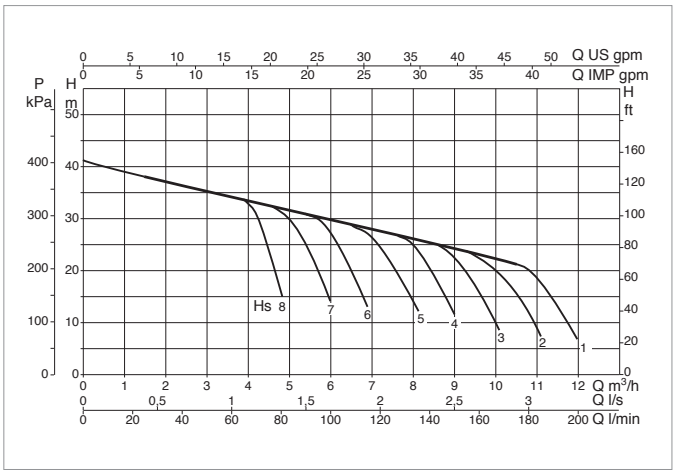

The performance curves are based on the kinematic viscosity values = 1 mm²/s and density equivalent to 1000 kg/m³. Curve tolerance according to ISO 9906.

MODEL	ELECTRICAL DATA							
	POWER SUPPLY 50 Hz	MOTOR TYPE	P1 MAX kW	P2 NOMINAL		In A	CAPACITOR	
				kW	HP		µF	Vc
JET 200 M	1 x 220 - 240 V ~		2	1,5	2	9	31,5	450
JET 200 T	3 x 230 - 400 V ~	IE3	2,1	1,5	2	6,4-3,7	-	-
JET 200 T	3 x 230 - 400 V ~	IE2	2	1,5	2	6,8-3,9	-	-

MODEL	A	A1	B	C	E	F	G	H	H1	H2	H3	I Ø	DNA	DNM	PACKING DIMENSIONS			VOLUME (mc)	GROSS WEIGHT Kg
															L/A	L/B	H		
JET 200 M	521	-	214	151	282	20	160	227	175	-	-	11	1 ½"	1 ¼"	612	248	279	0,042	27,1
JET 200 T	521	-	214	151	282	20	160	227	175	-	-	11	1 ½"	1 ¼"	612	248	279	0,042	27,6

JET 251 - SELF-PRIMING CENTRIFUGAL PUMPS

Liquid temperature range pumped: from 0 °C to +35 °C - Maximum ambient temperature: +40°C

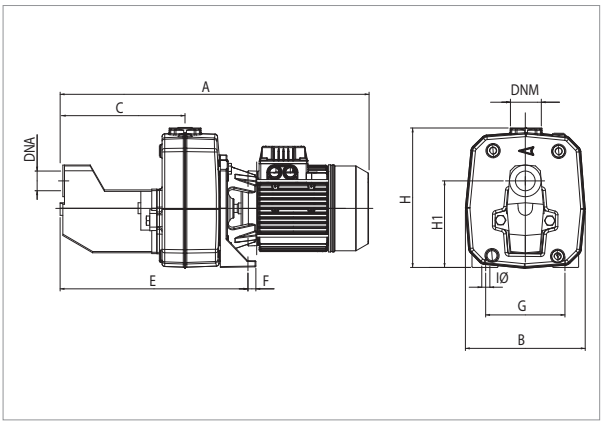

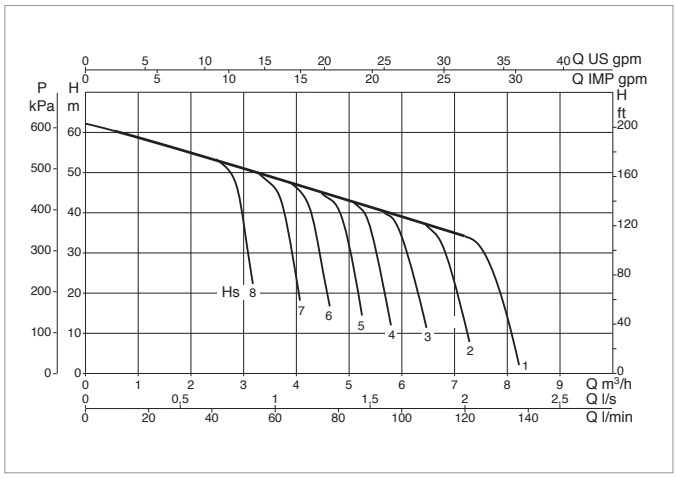

The performance curves are based on the kinematic viscosity values = 1 mm²/s and density equivalent to 1000 kg/m³. Curve tolerance according to ISO 9906.

MODEL	ELECTRICAL DATA							
	POWER SUPPLY 50 Hz	MOTOR TYPE	P1 MAX kW	P2 NOMINAL		In A	CAPACITOR	
				kW	HP		µF	Vc
JET 251 M	1 x 220 - 240 V ~		2,2	1,85	2,5	10	40	450
JET 251 T	3 x 230 - 400 V ~	IE3	2,1	1,85	2,5	6,4-3,7	-	-
JET 251 T	3 x 230 - 400 V ~	IE2	2,2	1,85	2,5	6,9-4	-	-

MODEL	A	A1	B	C	E	F	G	H	H1	H2	H3	I Ø	DNA	DNM	PACKING DIMENSIONS			VOLUME (mc)	GROSS WEIGHT Kg
															L/A	L/B	H		
JET 251 M	632	-	210	221	350	20	145	255	158	-	-	11	1 ¼"	1 "	657	248	279	0,045	35
JET 251 T	558	-	210	221	350	20	145	255	158	-	-	11	1 ¼"	1 "	612	248	279	0,042	30,8

JET 300 - SELF-PRIMING CENTRIFUGAL PUMPS

Liquid temperature range pumped: from 0 °C to +35 °C - Maximum ambient temperature: +40°C

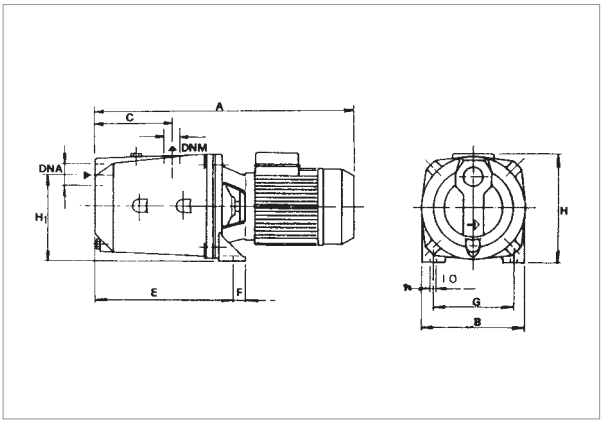

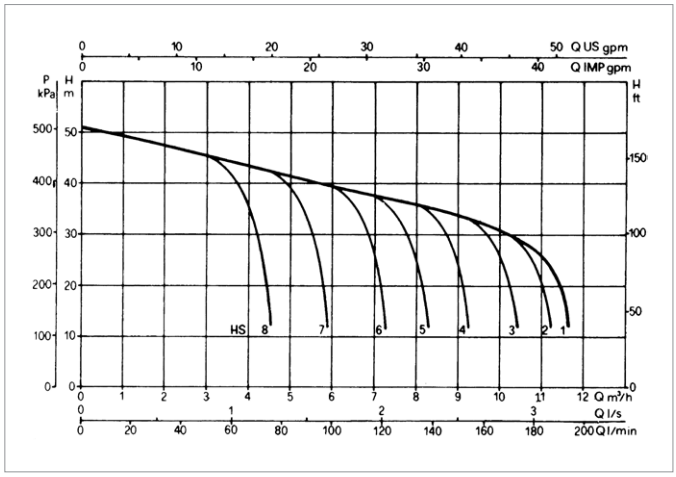

The performance curves are based on the kinematic viscosity values = 1 mm²/s and density equivalent to 1000 kg/m³. Curve tolerance according to ISO 9906.

MODEL	ELECTRICAL DATA							
	POWER SUPPLY 50 Hz	MOTOR TYPE	P1 MAX kW	P2 NOMINAL		In A	CAPACITOR	
				kW	HP		µF	Vc
JET 300 M	1 x 220 - 240 V ~		2,7	2,2	3	12	40	450
JET 300 T	3 x 230 - 400 V ~	IE3	2,5	2,2	3	7,4-4,3	-	-
JET 300 T	3 x 230 - 400 V ~	IE2	2,2	2,2	3	8,5-4,9	-	-

MODEL	A	A1	B	C	E	F	G	H	H1	H2	H3	I Ø	DNA	DNM	PACKING DIMENSIONS			VOLUME (mc)	GROSS WEIGHT Kg
															L/A	L/B	H		
JET 300 M	521	-	214	151	282	20	160	235	175	-	-	11	1 ½"	1 ¼"	612	248	279	0,045	31,5
JET 300 T	595	-	214	151	282	20	160	227	175	-	-	11	1 ½"	1 ¼"	657	248	279	0,042	19
JET 300 T	595	-	214	151	282	20	160	227	175	-	-	11	1 ½"	1 ¼"	657	248	279	0,042	27

JETINOX

SELF-PRIMING CENTRIFUGAL PUMPS

TECHNICAL DATA

Operating range:
from 0.4 to 10.5 m^3/h with head up to 62 metres
Liquid quality requirements: clean, free from solid or abrasive contaminants, non-viscous, non-aggressive, uncrystallised and chemically neutral
Liquid temperature range:
for domestic use: from 0°C to +35°C (EN 60335-2-41)
for other use: from 0°C to +40°C
Maximum suction depth: 8 metres
Maximum ambient temperature: +50°C
Maximum operating pressure: 8 bar (800 kPa)
Installation: fixed in a horizontal position
Special executions on request: alternative voltages and/or frequencies
Motor protection rating: IP 44
Terminal block protection rating: IP 55
Insulation class: F
Standard input voltage: single phase 220-240 V / 50 Hz
three phase 230-400 V / 50 Hz

APPLICATIONS

Self priming centrifugal pump with excellent suction capacity even in the presence of air bubbles.
Suitable for pumping water with low levels of sandy impurities.
Especially used in domestic water supply installations.
Suitable for small farms and gardening, small scale industrial services and where self priming is necessary.

CONSTRUCTIONAL FEATURES OF THE PUMP

Pump body, seal holder cover and wear ring in stainless steel.
Motor support in die cast aluminium.
Impeller, diffuser, venturi tube in technopolymer.
Carbon/ceramic mechanical seal.

CONSTRUCTIONAL FEATURES OF THE MOTOR

Asynchronous type, closed, with external air cooling.
Rotor mounted on oversized greased-for-life ball bearings, to guarantee low noise and long life.
Incorporated thermo-amperometric protection and permanently inserted capacitor in the single phase version.
It is recommended to use overload protection for three phase motor protection, in compliance with current legislation.
Manufacture pursuant to CEI 2-3 and CEI 61-69 (EN 60335-2-41) standard.

DAB PUMPS reserve the right to make modifications without prior notice

MATERIALS

N°	PARTS *	MATERIALS
1	PUMP BODY	AISI 304 STAINLESS STEEL X5 CRNi 1810 - UNI 6900/71
4	IMPELLER	TECHNOPOLYMER A
7	SHAFT WITH ROTOR	AISI 416 STAINLESS STEEL X12 CrS13 - UNI 6900/71
16	MECHANICAL SEAL	CARBON/CERAMIC
28	OR GASKET	NBR RUBBER
36	SEAL HOLDER COVER	AISI 304 STAINLESS STEEL X5 CRNi 1810 - UNI 6900/71
160	VENTURI DIFFUSER NOZZEL GROUP	TECHNOPOLYMER A

* In contact with liquid

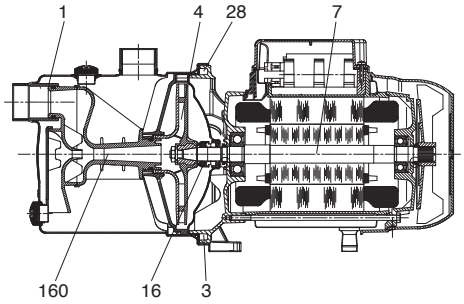

SELF PRIMING CAPACITY

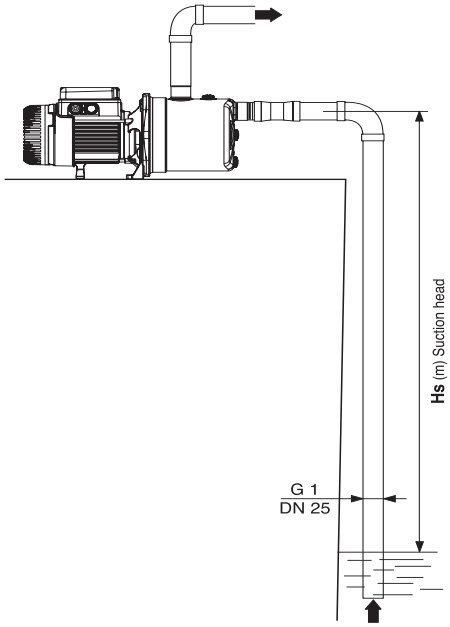

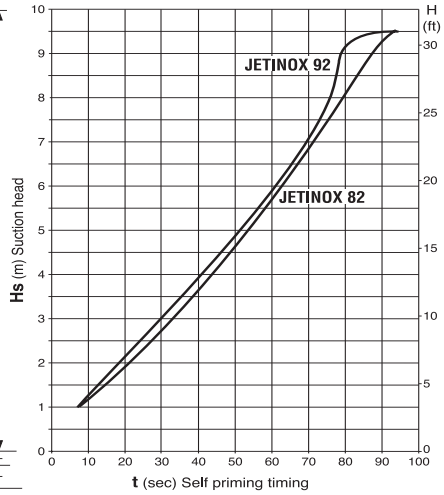

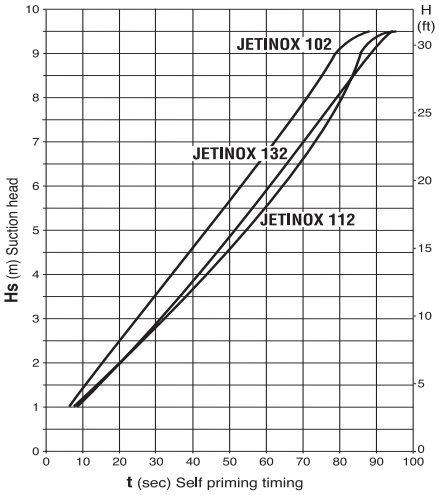

JETINOX

SELF-PRIMING CENTRIFUGAL PUMPS

PERFORMANCE RANGE

The performance curves are based on kinematic viscosity values = 1 mm²/s and density equivalent to 1000 kg/m³. Curve tolerance according to ISO 9906.

GRAPHIC SELECTION TABLE

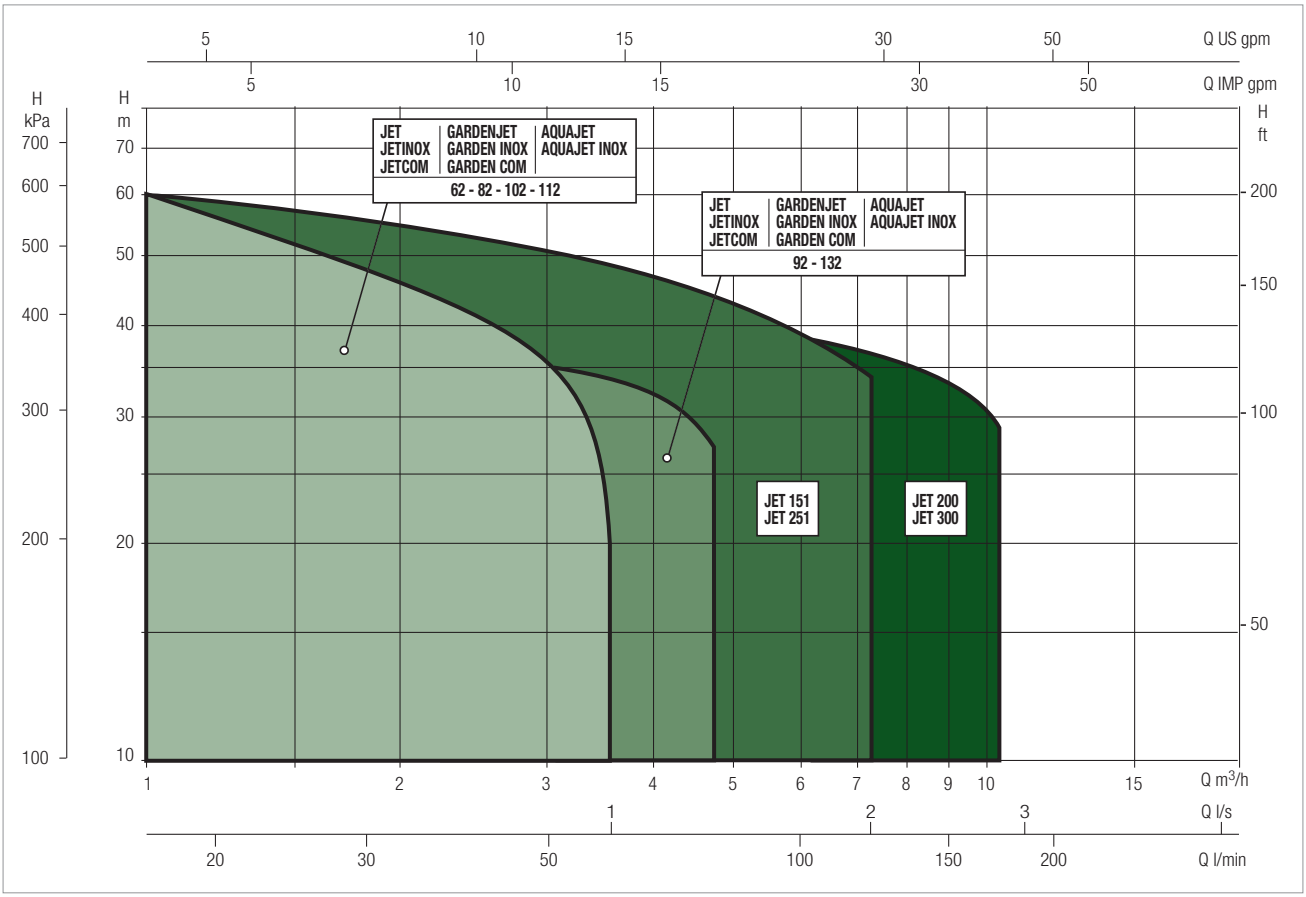

JETINOX SELECTION TABLE

MODEL	Q=m³/h	0	0,6	1,2	1,8	2,4	3,0	3,6	4,2	4,8
	Q=l/min	0	10	20	30	40	50	60	70	80
JETINOX 82 M	H (m)	47	40	34	30	26,2	23,5	20,3		
JETINOX 82 T		47	40	34	30	26,2	23,5	20,3		
JETINOX 102 M		53,8	47	41	36,3	32,4	28,8	25,8		
JETINOX 102 T		53,8	47	41	36,3	32,4	28,8	25,8		
JETINOX 112 M		61	54	47,8	42,8	38,8	34,8	20		
JETINOX 112 T		61	54	47,8	42,8	38,8	34,8	20		
JETINOX 92 M		36,2	33,5	31	28,4	26	24	21,8	19,6	17,5
JETINOX 132 M		48,3	45,6	42,8	40	37,6	35	32,5	30	27,2
JETINOX 132 T		48,3	45,6	42,8	40	37,6	35	32,5	30	27,2

JETINOX 82 - SELF-PRIMING CENTRIFUGAL PUMPS

Liquid temperature range pumped: from 0 °C to +35 °C - Maximum ambient temperature: +50°C

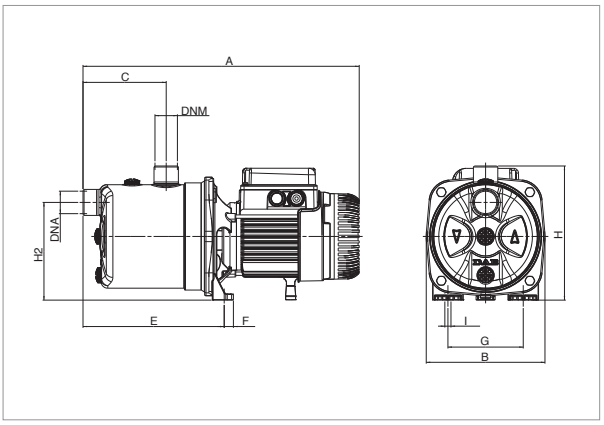

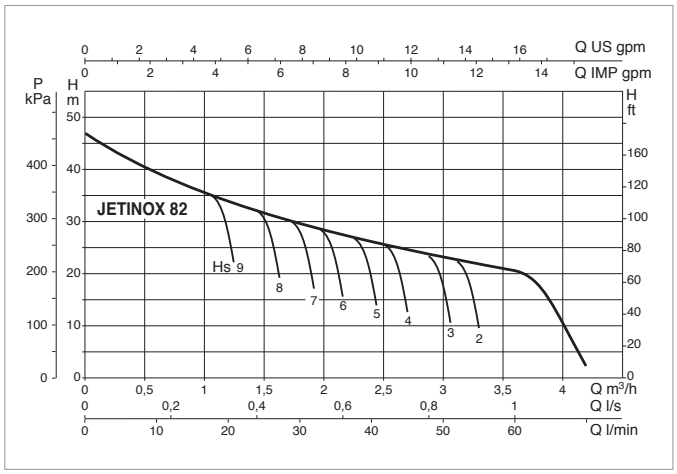

The performance curves are based on the kinematic viscosity values = 1 mm²/s and density equivalent to 1000 kg/m³. Curve tolerance according to ISO 9906.

MODEL	ELECTRICAL DATA						
	POWER SUPPLY 50 Hz	P1 MAX kW	P2 NOMINAL		In A	CAPACITOR	
			kW	HP		µF	Vc
JETINOX 82 M	1 x 220 - 240 V ~	0,85	0,6	0,8	3,8	12,5	450
JETINOX 82 T	3 x 230 - 400 V ~	0,86	0,6	0,8	2,8-1,6	-	-

MODEL	A	A1	B	C	E	F	G	H	H1	H2	H3	I Ø	DNA	DNM	PACKING DIMENSIONS			VOLUME (mc)	GROSS WEIGHT Kg
															L/A	L/B	H		
JETINOX 82 M	406	-	174	122	207	14	111	197	-	144	-	9	1"	1"	470	240	240	0,027	7,8
JETINOX 82 T	406	-	174	122	207	14	111	197	-	144	-	9	1"	1"	470	240	240	0,027	7,8

JETINOX 102 - SELF-PRIMING CENTRIFUGAL PUMPS

Liquid temperature range pumped: from 0 °C to +35 °C - Maximum ambient temperature: +50°C

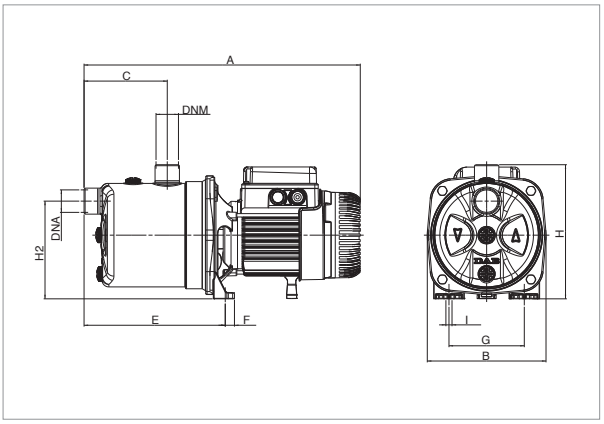

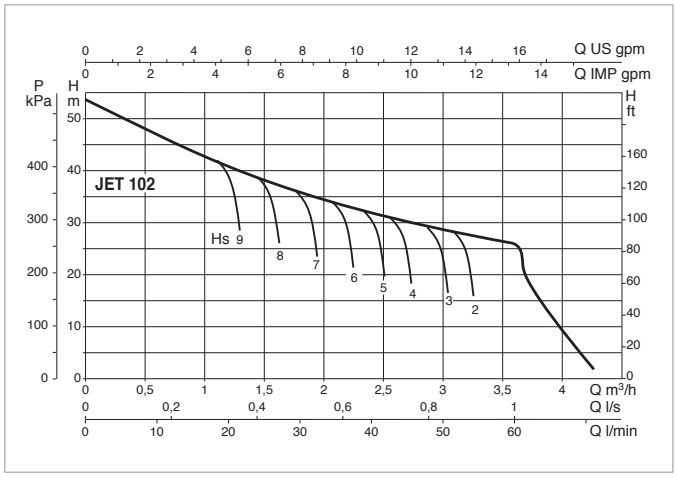

The performance curves are based on the kinematic viscosity values = 1 mm²/s and density equivalent to 1000 kg/m³. Curve tolerance according to ISO 9906.

MODEL	ELECTRICAL DATA							
	POWER SUPPLY 50 Hz	MOTOR TYPE	P1 MAX kW	P2 NOMINAL		In A	CAPACITOR	
				kW	HP		µF	Vc
JETINOX 102 M	1 x 220 - 240 V ~	-	1,13	0,75	1	5,1	16	450
JETINOX 102 T	3 x 230 - 400 V ~	IE3	1,03	0,75	1	3,4-2	-	-
JETINOX 102 T	3 x 230 - 400 V ~	IE2	1,04	0,75	1	3,3-1,9	-	-

MODEL	A	A1	B	C	E	F	G	H	H1	H2	H3	I Ø	DNA	DNM	PACKING DIMENSIONS			VOLUME (mc)	GROSS WEIGHT Kg
															L/A	L/B	H		
JETINOX 102 M	424	-	174	122	207	14	111	197	-	144	-	9	1"	1"	470	240	240	0,027	9,6
JETINOX 102 T	424	-	174	122	207	14	111	197	-	144	-	9	1"	1"	470	240	240	0,027	9,6

JETINOX 112 - SELF-PRIMING CENTRIFUGAL PUMPS

Liquid temperature range pumped: from 0 °C to +35 °C - Maximum ambient temperature: +50°C

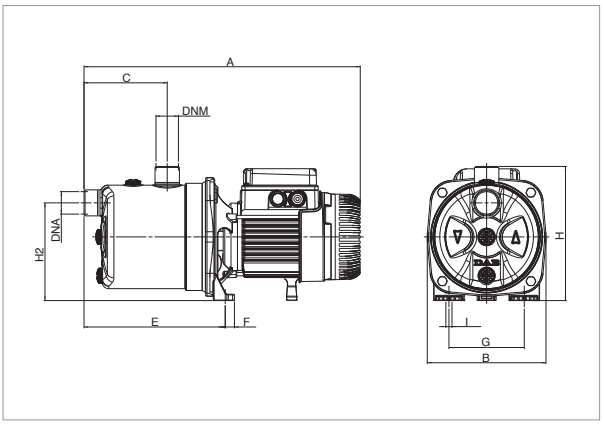

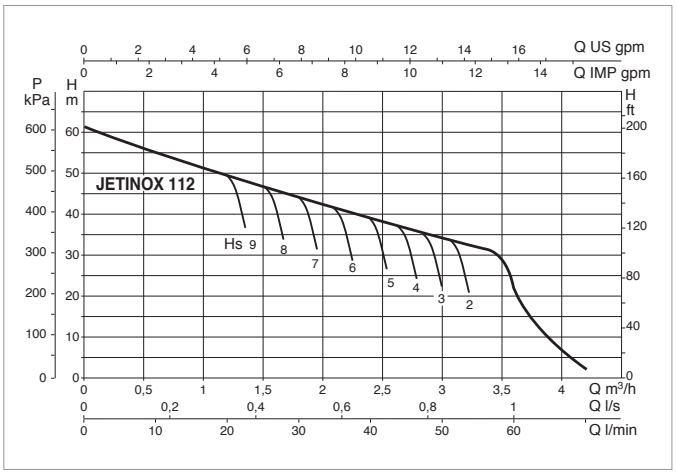

The performance curves are based on the kinematic viscosity values = 1 mm²/s and density equivalent to 1000 kg/m³. Curve tolerance according to ISO 9906.

MODEL	ELECTRICAL DATA							
	POWER SUPPLY 50 Hz	MOTOR TYPE	P1 MAX kW	P2 NOMINAL		In A	CAPACITOR	
				kW	HP		µF	Vc
JETINOX 112 M	1 x 220 - 240 V ~	-	1,4	1	1,36	6,2	25	450
JETINOX 112 T	3 x 230 - 400 V ~	IE3	1,3	1	1,36	4,1-2,4	-	-
JETINOX 112 T	3 x 230 - 400 V ~	IE2	1,35	1	1,36	4,3-2,5	-	-

MODEL	A	A1	B	C	E	F	G	H	H1	H2	H3	I Ø	DNA	DNM	PACKING DIMENSIONS			VOLUME (mc)	GROSS WEIGHT Kg
															L/A	L/B	H		
JETINOX 112 M	424	-	174	122	207	14	111	197	-	144	-	9	1"	1"	470	240	240	0,027	10,6
JETINOX 112 T	440	-	174	122	207	14	111	197	-	144	-	9	1"	1"	470	240	240	0,027	10,6

JETINOX 92 - SELF-PRIMING CENTRIFUGAL PUMPS

Liquid temperature range pumped: from 0 °C to +35 °C - Maximum ambient temperature: +50°C

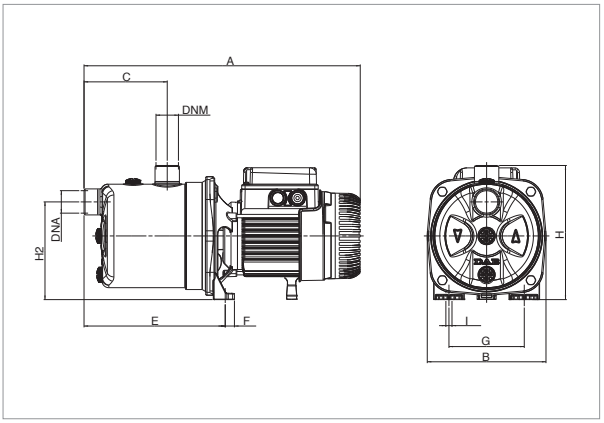

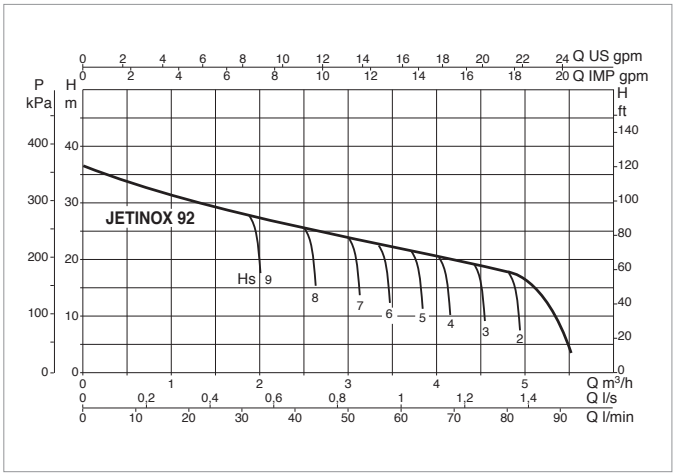

The performance curves are based on the kinematic viscosity values = 1 mm²/s and density equivalent to 1000 kg/m³. Curve tolerance according to ISO 9906.

MODEL	ELECTRICAL DATA						
	POWER SUPPLY 50 Hz	P1 MAX kW	P2 NOMINAL		In A	CAPACITOR	
			kW	HP		µF	Vc
JETINOX 92 M	1 x 220 - 240 V ~	0,94	0,75	1	4,2	14	450

MODEL	A	A1	B	C	E	F	G	H	H1	H2	H3	I Ø	DNA	DNM	PACKING DIMENSIONS			VOLUME (mc)	GROSS WEIGHT Kg
															L/A	L/B	H		
JETINOX 92 M	406	-	174	122	207	14	111	197	-	144	-	9	1"	1"	470	240	240	0,027	8,8

JETINOX 132 - SELF-PRIMING CENTRIFUGAL PUMPS

Liquid temperature range pumped: from 0 °C to +35 °C - Maximum ambient temperature: +50°C

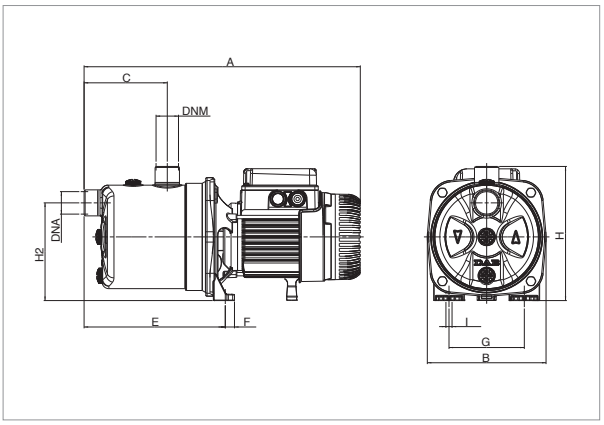

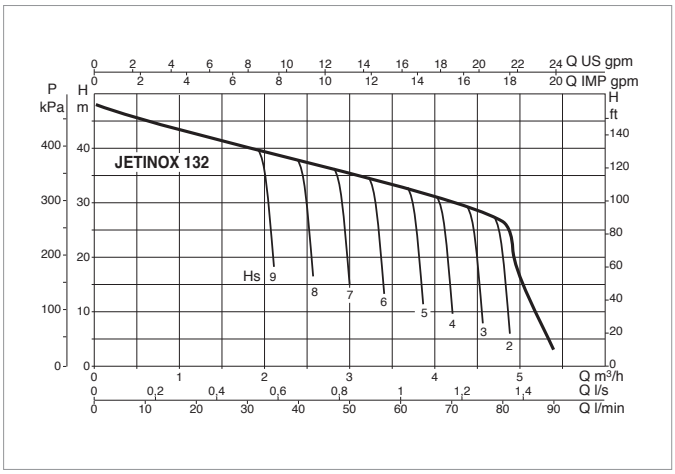

The performance curves are based on the kinematic viscosity values = 1 mm²/s and density equivalent to 1000 kg/m³. Curve tolerance according to ISO 9906.

MODEL	ELECTRICAL DATA							
	POWER SUPPLY 50 Hz	MOTOR TYPE	P1 MAX kW	P2 NOMINAL		In A	CAPACITOR	
				kW	HP		µF	Vc
JETINOX 132 M	1 x 220 - 240 V ~	-	1,49	1	1,36	6,6	25	450
JETINOX 132 T	3 x 230 - 400 V ~	IE3	1,37	1	1,36	4,3-2,5	-	-
JETINOX 132 T	3 x 230 - 400 V ~	IE2	1,43	1	1,36	4,7-2,7	-	-

MODEL	A	A1	B	C	E	F	G	H	H1	H2	H3	I Ø	DNA	DNM	PACKING DIMENSIONS			VOLUME (mc)	GROSS WEIGHT Kg
															L/A	L/B	H		
JETINOX 132 M	424	-	174	122	207	14	111	197	-	144	-	9	1"	1"	470	240	240	0,027	10,6
JETINOX 132 T	440	-	174	122	207	14	111	197	-	144	-	9	1"	1"	470	240	240	0,027	10,6
JETINOX 132 T	424	-	174	122	207	14	111	197	-	144	-	9	1"	1"	470	240	240	0,027	10,6

DAB PUMPS reserve the right to make modifications without prior notice

JETCOM

SELF-PRIMING CENTRIFUGAL PUMPS

TECHNICAL DATA

Operating range:
from 0.6 to 5.4 m^3/h with head up to 54 metres
Liquid quality requirements: clean, free from solid or abrasive contaminants, non-viscous, non-aggressive, uncrystallised and chemically neutral
Liquid temperature range: from 0°C to +35°C for domestic use (EN 60335-2-41)
Maximum ambient temperature: +40°C
Maximum operating pressure: 6 bar (600 kPa)
Maximum suction depth: 8 metres
Installation: fixed in a horizontal position
Special executions on request: alternative voltages and/or frequencies
Motor protection rating: IP 44
Terminal block protection rating: IP 55
Insulation class: F
Standard input voltage: single phase 220/240 V / 50 Hz
three phase 230/400 V - 50 Hz

APPLICATIONS

Self priming centrifugal pump with excellent suction capacity even in the presence of air bubbles.
Suitable for pumping water with low levels of sandy impurities.
Especially used in domestic water supply installations. Suitable for small farms and gardening, small scale industrial services and where self priming is necessary.

CONSTRUCTIONAL FEATURES OF THE PUMP

Pump body in technocpolymer and motor support in die cast aluminium.
Impeller, diffuser, venturi tube and sand guard in technopolymer
Stainless steel wear ring.
Carbon/ceramic mechanical seal.

CONSTRUCTIONAL FEATURES OF THE MOTOR

Asynchronous type, closed, with external air cooling.
Rotor mounted on oversized greased-for-life ball bearings, to guarantee low noise and long life.
Incorporated thermo-amperometric protection and permanently inserted capacitor in the single phase version.
It is recommended to use overload protection for three phase motor protection, in compliance with current legislation.
Manufactured pursuant to CEI 2-3 and CEI 61-69 (EN 60335-2-41).

DAB PUMPS reserve the right to make modifications without prior notice

MATERIALS

N°	PARTS *	MATERIALS
1	PUMP BODY	TECHNOPOLYMER A
4	IMPELLER	TECHNOPOLYMER A
7	SHAFT WITH ROTOR	AISI 416 STAINLESS STEEL X12 CrS13 - UNI 6900/71
16	MECHANICAL SEAL	CARBON/CERAMIC
28	OR GASKET	NBR RUBBER
36	SEAL HOLDER COVER	AISI 304 STAINLESS STEEL X5 CRNi 1810 - UNI 6900/71
160	VENTURI DIFFUSER NOZZEL GROUP	TECHNOPOLYMER A

* In contact with liquid

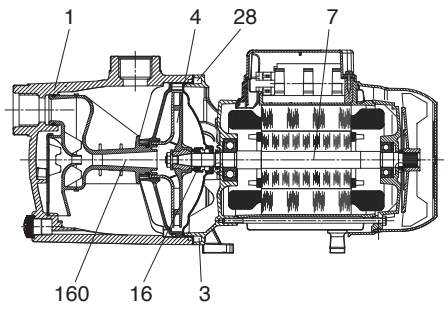

SELF PRIMING CAPACITY

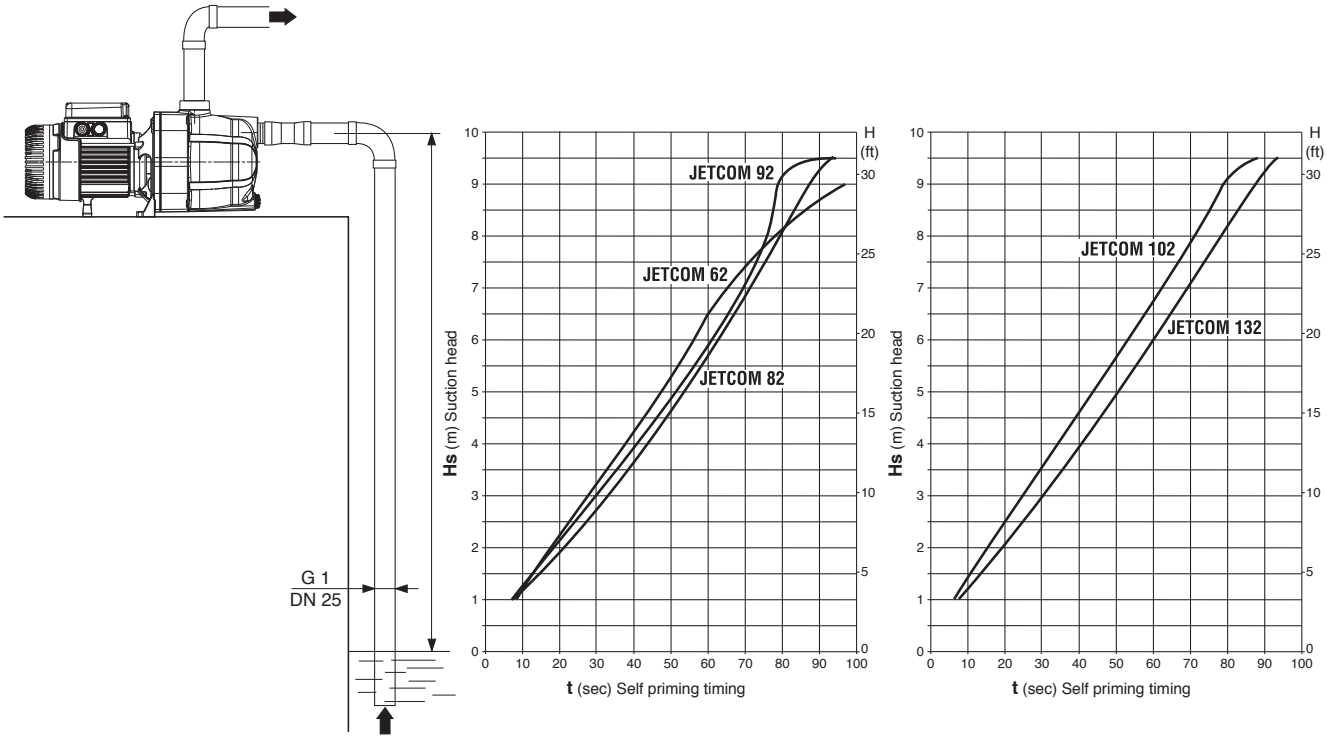

JETCOM

SELF-PRIMING CENTRIFUGAL PUMPS

PERFORMANCE RANGE

The performance curves are based on kinematic viscosity values = 1 mm²/s and density equivalent to 1000 kg/m³. Curve tolerance according to ISO 9906.

GRAPHIC SELECTION TABLE

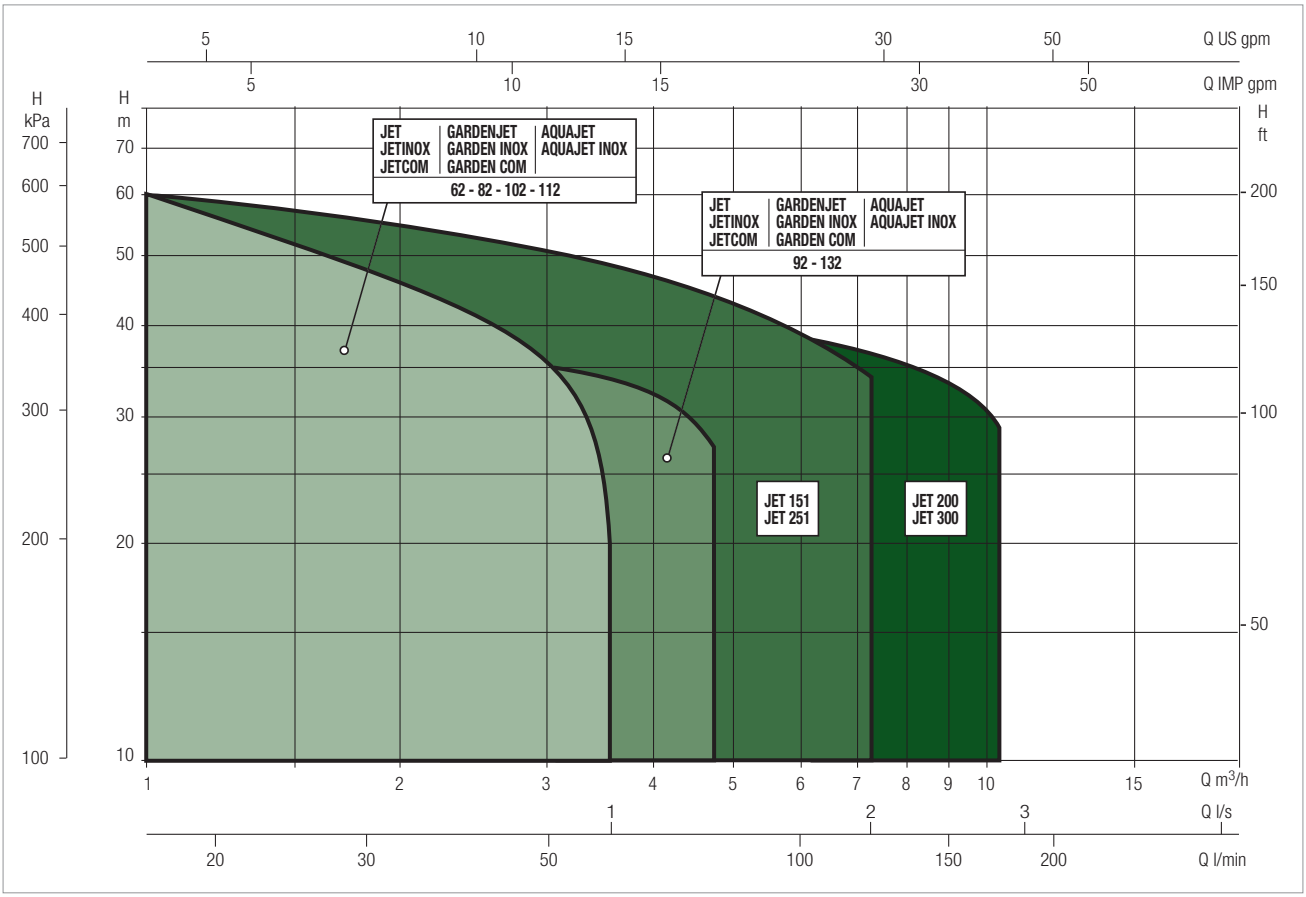

JETCOM SELECTION TABLE

MODEL	Q=m³/h	0	0,6	1,2	1,8	2,4	3,0	3,6	4,2	4,8
	Q=l/min	0	10	20	30	40	50	60	70	80
JETCOM 62 M	H (m)	42	35	29,2	25,6	22,9	13			
JETCOM 82 M		47	40	34	30	26,2	23,5	20		
JETCOM 102 M		53,8	47	41	36,3	32,4	28,8	25,8		
JETCOM 102 T		53,8	47	41	36,3	32,4	28,8	25,8		
JETCOM 92 M		36,2	33,5	31	28,4	26	24	21,8	19,6	17,5
JETCOM 132 M		48,3	45,6	42,8	40	37,6	35	32,5	30	27,2
JETCOM 132 T		48,3	45,6	42,8	40	37,6	35	32,5	30	27,2

JETCOM 62 - SELF-PRIMING CENTRIFUGAL PUMPS

Liquid temperature range pumped: from 0 °C to +35 °C - Maximum ambient temperature: +40°C

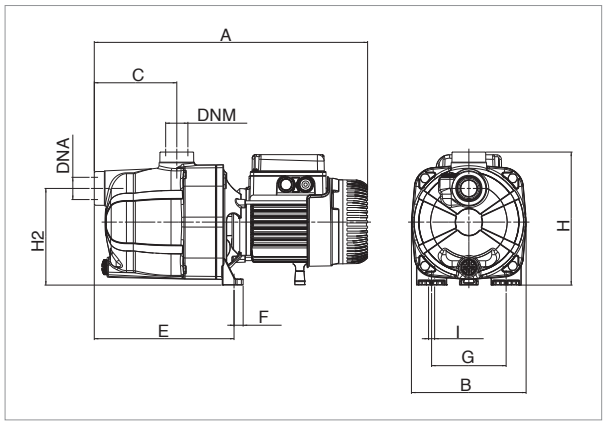

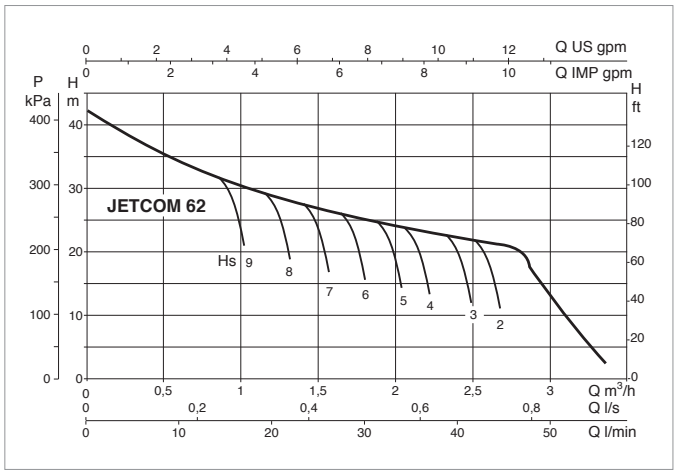

The performance curves are based on the kinematic viscosity values = 1 mm²/s and density equivalent to 1000 kg/m³. Curve tolerance according to ISO 9906.

MODEL	ELECTRICAL DATA						
	POWER SUPPLY 50 Hz	P1 MAX kW	P2 NOMINAL		In A	CAPACITOR	
			kW	HP		µF	Vc
JETCOM 62 M	1 x 220 - 240 V ~	0,72	0,44	0,6	3,12	12,5	450

MODEL	A	A1	B	C	E	F	G	H	H1	H2	H3	I Ø	DNA	DNM	PACKING DIMENSIONS			VOLUME (mc)	GROSS WEIGHT Kg
															L/A	L/B	H		
JETCOM 62 M	406	-	170	122	208	14	111	198	-	144	-	9	1"	1"	470	240	240	0,027	7,5

JETCOM 82 - SELF-PRIMING CENTRIFUGAL PUMPS

Liquid temperature range pumped: from 0 °C to +35 °C - Maximum ambient temperature: +40°C

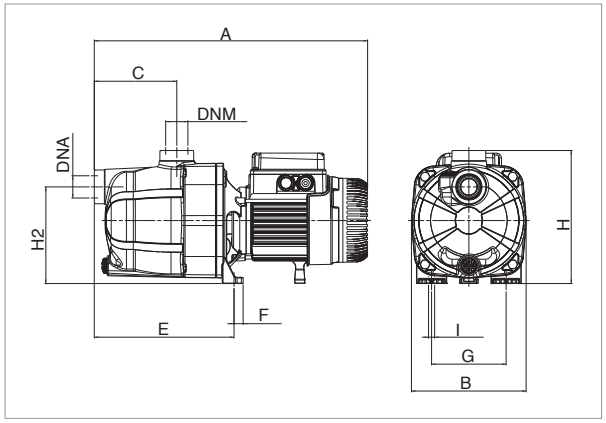

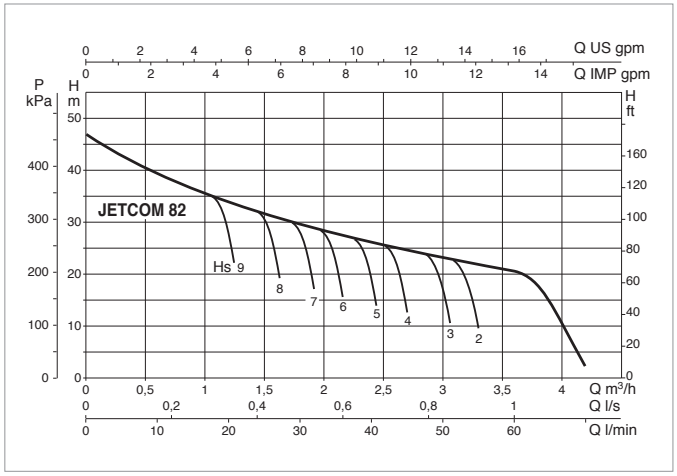

The performance curves are based on the kinematic viscosity values = 1 mm²/s and density equivalent to 1000 kg/m³. Curve tolerance according to ISO 9906.

MODEL	ELECTRICAL DATA						
	POWER SUPPLY 50 Hz	P1 MAX kW	P2 NOMINAL		In A	CAPACITOR	
			kW	HP		µF	Vc
JETCOM 82 M	1 x 220 - 240 V ~	0,85	0,6	0,8	3,8	12,5	450

MODEL	A	A1	B	C	E	F	G	H	H1	H2	H3	I Ø	DNA	DNM	PACKING DIMENSIONS			VOLUME (mc)	GROSS WEIGHT Kg
															L/A	L/B	H		
JETCOM 82 M	406	-	170	122	208	14	111	198	-	144	-	9	1"	1"	470	240	240	0,027	7,7

JETCOM 102 - SELF-PRIMING CENTRIFUGAL PUMPS

Liquid temperature range pumped: from 0 °C to +35 °C - Maximum ambient temperature: +40°C

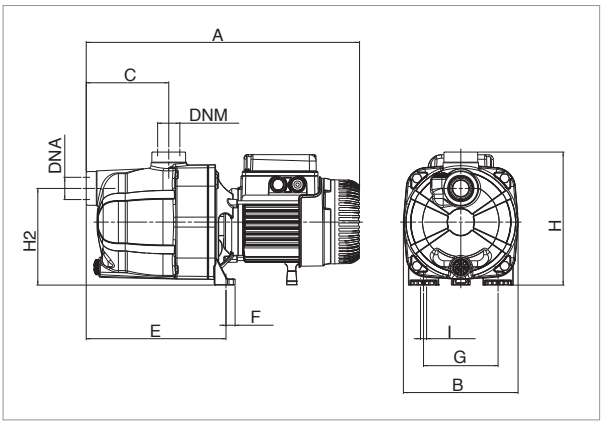

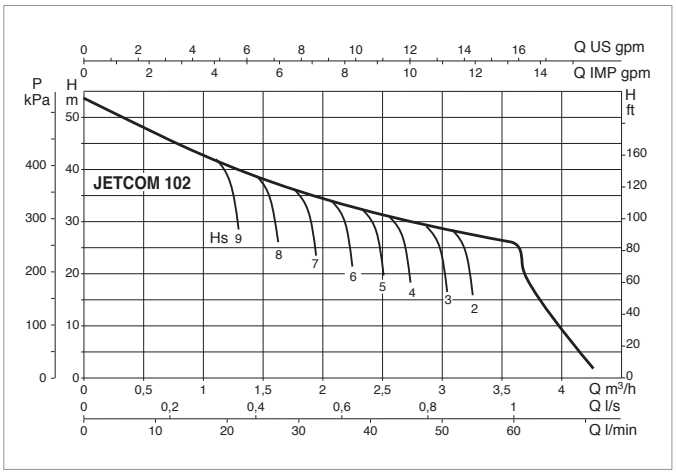

The performance curves are based on the kinematic viscosity values = 1 mm²/s and density equivalent to 1000 kg/m³. Curve tolerance according to ISO 9906.

MODEL	ELECTRICAL DATA							
	POWER SUPPLY 50 Hz	MOTOR TYPE	P1 MAX kW	P2 NOMINAL		In A	CAPACITOR	
				kW	HP		µF	Vc
JETCOM 102 M	1 x 220 - 240 V ~		1,13	0,75	1	5,1	16	450
JETCOM 102 T	3 x 230 - 400 V ~	IE3	1,03	0,75	1	3,4-2	-	-
JETCOM 102 T	3 x 230 - 400 V ~	IE2	1,04	0,75	1	3,3-1,9	-	-

MODEL	A	A1	B	C	E	F	G	H	H1	H2	H3	I Ø	DNA	DNM	PACKING DIMENSIONS			VOLUME (mc)	GROSS WEIGHT Kg
															L/A	L/B	H		
JETCOM 102 M	425	-	170	122	208	14	111	203	-	144	-	9	1"	1"	470	240	240	0,027	9,5
JETCOM 102 T	425	-	170	122	208	14	111	203	-	144	-	9	1"	1"	470	240	240	0,027	9,5

JETCOM 92 - SELF-PRIMING CENTRIFUGAL PUMPS

Liquid temperature range pumped: from 0 °C to +35 °C - Maximum ambient temperature: +40°C

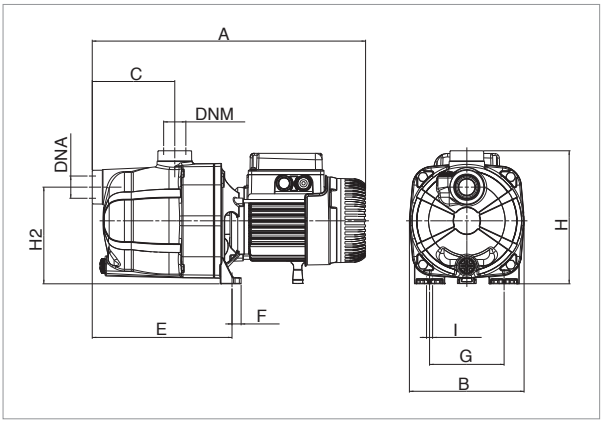

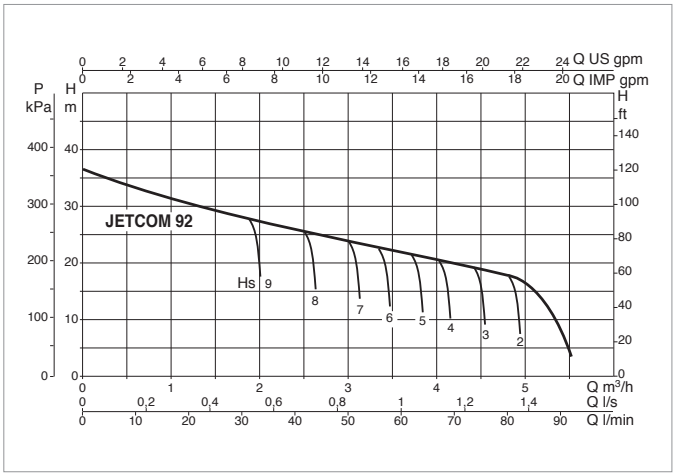

The performance curves are based on the kinematic viscosity values = 1 mm²/s and density equivalent to 1000 kg/m³. Curve tolerance according to ISO 9906.

MODEL	ELECTRICAL DATA						
	POWER SUPPLY 50 Hz	P1 MAX kW	P2 NOMINAL		In A	CAPACITOR	
			kW	HP		µF	Vc
JETCOM 92 M	1 x 220 - 240 V ~	0,94	0,75	1	4,2	14	450

MODEL	A	A1	B	C	E	F	G	H	H1	H2	H3	I Ø	DNA	DNM	PACKING DIMENSIONS			VOLUME (mc)	GROSS WEIGHT Kg
															L/A	L/B	H		
JETCOM 92 M	425	-	170	122	208	14	111	203	-	144	-	9	1"	1"	470	240	240	0,027	8,7

JETCOM 132 - SELF-PRIMING CENTRIFUGAL PUMPS

Liquid temperature range pumped: from 0 °C to +35 °C - **Maximum ambient temperature:** +40°C

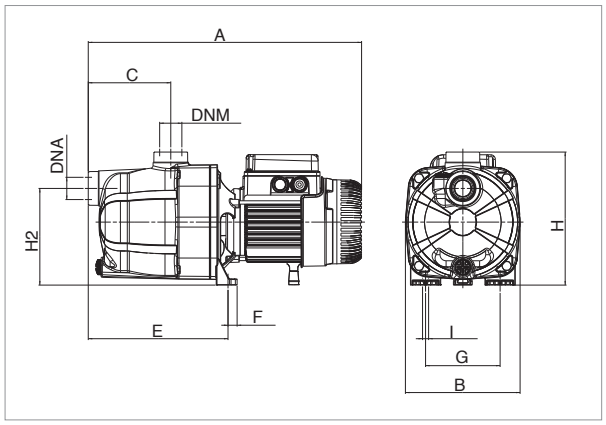

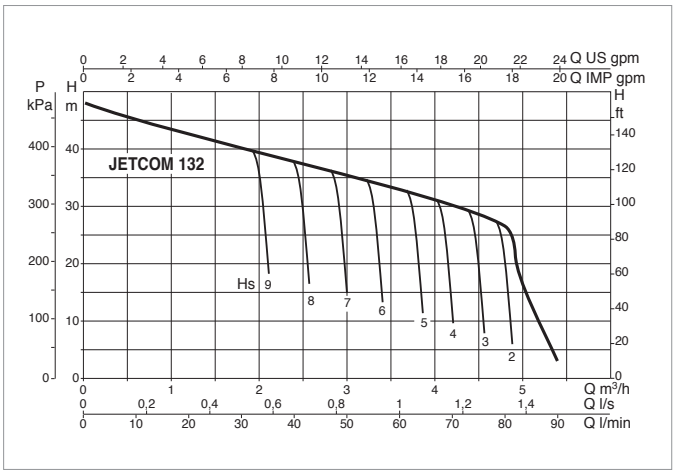

The performance curves are based on the kinematic viscosity values = 1 mm²/s and density equivalent to 1000 kg/m³. Curve tolerance according to ISO 9906.

MODEL	ELECTRICAL DATA							
	POWER SUPPLY 50 Hz	MOTOR TYPE	P1 MAX kW	P2 NOMINAL		In A	CAPACITOR	
				kW	HP		µF	Vc
JETCOM 132 M	1 x 220 - 240 V ~	-	1,49	1	1,36	6,6	25	450
JETCOM 132 T	3 x 230 - 400 V ~	IE3	1,37	1	1,36	4,3-2,5	-	-
JETCOM 132 T	3 x 230 - 400 V ~	IE2	1,43	1	1,36	4,7-2,7	-	-

MODEL	A	A1	B	C	E	F	G	H	H1	H2	H3	I Ø	DNA	DNM	PACKING DIMENSIONS			VOLUME (mc)	GROSS WEIGHT Kg
															L/A	L/B	H		
JETCOM 132 M	425	-	170	122	208	14	111	203	-	144	-	9	1"	1"	470	240	240	0,027	10,5
JETCOM 132 T	441	-	170	122	208	14	111	203	-	144	-	9	1"	1"	470	240	240	0,027	10,5

DP

PUMPS FOR DEEP SUCTION

DP 82-102

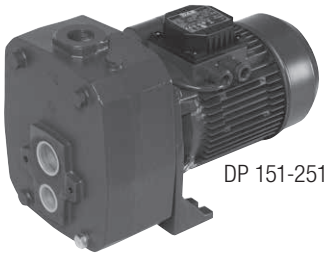

DP 151-251

TECHNICAL DATA

Operating range: up to 4.3 m^3/h
Liquid quality requirements: clean, free from solid or abrasive contaminants, non-viscous, non-aggressive, uncrystallised and chemically neutral, close to the properties of water
Liquid temperature range:
from 0°C to +35°C for domestic use (EN 60335-2-41)
for other use: from 0°C to +40°C
Maximum ambient temperature: +40°C
Maximum operating pressure:
DP 82 - DP 102 6 bar (600 kPa)
DP 151 - DP 251 8 bar (800 kPa)
Installation: fixed in a horizontal position
Special executions on request: alternative voltages and/or frequencies
Motor protection rating: IP 44
Terminal block protection rating: IP 55
Insulation class: F
Standard input voltage: single phase 220-240 V / 50 Hz
three phase 230-400 V / 50 Hz

APPLICATIONS

Self priming centrifugal pump for suction up to 27 metres, reached by using the ejector to be inserted in wells from 4” in diameter or larger. Used for water supply in large country homes and small farms.

CONSTRUCTIONAL FEATURES OF THE PUMP

Pump: Cast-iron pump body and motor support. Impeller and diffuser in technopolymer.
Stainless steel wear ring. Carbon/ceramic mechanical seal.
Ejector: Body in cast iron Venturi tube in technopolymer A and nozzle in brass
The ejector is available in three models (E 20 - E 25 - E 30) depending on the performance required.

CONSTRUCTIONAL FEATURES OF THE MOTOR

Rotor mounted on oversized greased-for-life ball bearings. Incorporated thermo-amperometric protection and permanently inserted capacitor in the single phase version. It is recommended to use remote overload protection for three phase motors, in compliance with current legislation. Manufactured pursuant to CEI 61-69 (EN 60335-2-41).

MATERIALS

N°	PARTS*	MATERIALS
1	PUMP BODY	200 UNI ISO 185 CAST IRON
2	EJECTOR BODY	200 UNI ISO 185 CAST IRON
3	FRAME	200 UNI ISO 185 CAST IRON
4	IMPELLER	TECHNOPOLYMER
6	DIFFUSER	TECHNOPOLYMER
7	SHAFT WITH ROTOR	AISI 416 STAINLESS STEEL X12 CRS13 UNI 6900/71 (DP 82 - DP 102) AISI 303 STAINLESS STEEL X10CRNIS 1809 UNI 6900/71 (DP 151 - DP 251)
8	VENTURI PIPE	TECHNOPOLYMER
9	NOZZLE	BRASS
16	MECHANICAL SEAL	CARBON/CERAMIC
28	OR GASKET	NBR RUBBER

* In contact with liquid

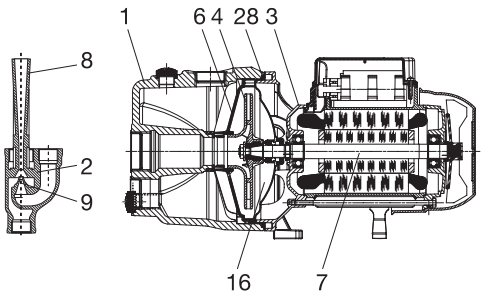

DP 82 - DP 102 - PUMPS FOR DEEP SUCTION

Liquid temperature range pumped: from 0 °C to +35 °C - Maximum ambient temperature: +40°C

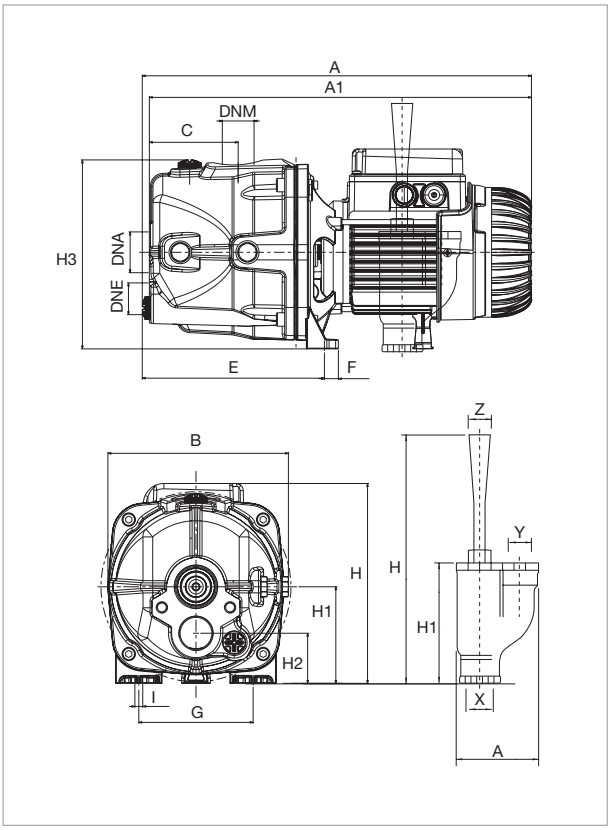

The performance curves are based on the kinematic viscosity values = 1 mm²/s and density equivalent to 1000 kg/m³. Curve tolerance according to ISO 9906.

HYDRAULIC DATA (n ~ 2800 1/min.)								
TYPE PUMP	TYPE EJECTOR	DEEP SUCTION	Discharge pressure in bar					
			1,5	2	2,5	3	3,5	4
			Capacity table in l/h					
DP 82 M - T	E 25	9	1813	1080	446	33	–	–
		12	1426	225	–	–	–	–
		15	900	326	–	–	–	–
	E 30	9	1753	1286	812	524	261	12
		12	1345	965	608	329	162	0
		15	1166	761	452	228	45	–
DP 102 M - T	E 25	9	2386	1756	1097	515	126	–
		12	1930	1190	536	87	–	–
		15	1459	773	252	–	–	–
	E 30	12	–	1240	872	566	329	156
		15	–	1028	701	449	255	96
		18	–	785	527	302	150	15
		21	–	635	374	180	39	–

MODEL	ELECTRICAL DATA							
	POWER SUPPLY 50 Hz	MOTOR TYPE	P1 MAX kW	P2 NOMINAL		In A	CAPACITOR	
				kW	HP		µF	Vc
DP 82 M	1x220-240 V ~	-	0,73	0,6	0,8	3,4	12,5	450
DP 82 T	3x230-400 V ~	-	0,73	0,6	0,8	2,6/1,5	–	–
DP 102 M	1x220-240 V ~	-	0,79	0,75	1	3,8	16	450
DP 102 T	3x230-400 V ~	IE3	0,9	0,75	1	3,3/1,9	–	–
DP 102 T	3x230-400 V ~	IE2	0,64	0,75	1	2,6/1,5	–	–

MODEL	A	A1	B	C	E	F	G	H	H1	H2	H3	I Ø	DNA GAS	DNM GAS	DNE GAS	EJECTOR						PACKING DIMENSIONS			VOLUME (mc)	GROSS WEIGHT Kg
																A	H	H1	X	Y	Z	L/A	L/B	H		
DP 82 M - T	377	371	175	86	177	13	111	194	94	49	179	9	1 ¼"	1"	1"	97	295	143	1" G	1" G	1 ¼" G	480	240	240	0,03	10,7
DP 102 M - T	398	392	175	86	177	13	111	203	94	49	179	9	1 ¼"	1"	1"	97	295	143	1" G	1" G	1 ¼" G	480	240	240	0,03	13

DP 151 - DP 251 - PUMPS FOR DEEP SUCTION

Liquid temperature range pumped: from 0 °C to +35 °C - Maximum ambient temperature: +40°C

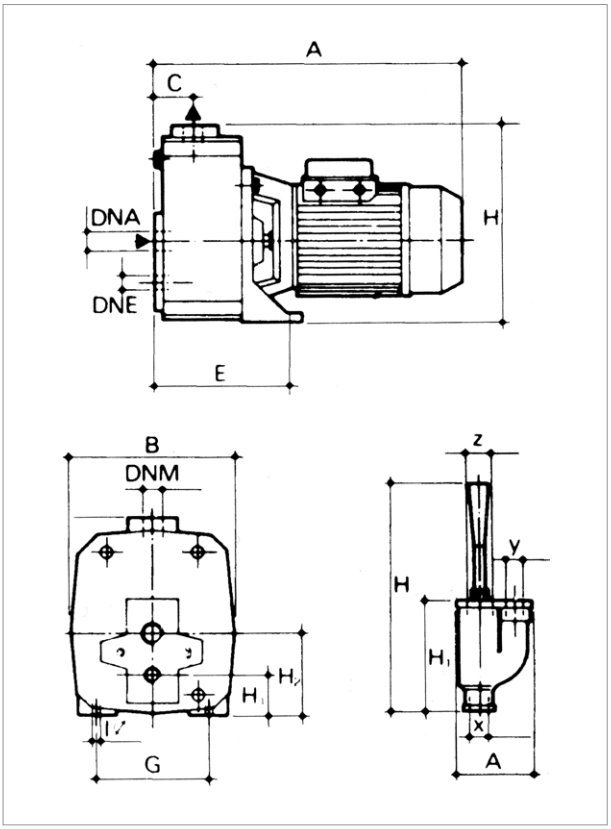

The performance curves are based on the kinematic viscosity values = 1 mm²/s and density equivalent to 1000 kg/m³. Curve tolerance according to ISO 9906.

HYDRAULIC DATA (n ~ 2800 1/min.)											
TYPE PUMP	TYPE EJECTOR	DEEP SUCTION	Discharge pressure in bar								
			3	3,5	4	4,5	5	5,5	6	6,5	7
			Capacity table in l/h								
DP 151 M - T	E 20	9	3470	2890	2220	1500	750	–	–	–	–
		12	3110	2510	1850	1100	300	–	–	–	–
		15	2710	2100	1380	640	–	–	–	–	–
		18	2360	1700	950	–	–	–	–	–	–
	E 25	15	2800	2330	1830	1350	900	520	–	–	–
		18	2530	2050	1550	1090	680	300	–	–	–
		21	2280	1800	1300	860	470	–	–	–	–
	E 30	21	1820	1650	1410	1160	910	700	520	–	–
		24	1680	1520	1260	1020	780	580	420	–	–
		27	1550	1360	1110	880	680	490	330	–	–
DP 251 M - T	E 20	9	4300	3600	2900	2180	1400	640	–	–	–
		12	3750	3140	2540	1700	940	–	–	–	–
		15	–	2780	2040	1300	500	–	–	–	–
		18	–	2340	1610	820	–	–	–	–	–
	E 25	15	–	2920	2400	1900	1400	950	570	–	–
		18	–	2600	2110	1620	1150	720	360	–	–
		21	–	2350	1850	1350	900	510	–	–	–
		24	–	2050	1550	1080	660	300	–	–	–
	E 30	21	–	–	1710	1480	1220	980	770	590	420
		24	–	–	1580	1330	1080	850	670	490	330
		27	–	–	1440	1200	950	750	560	400	250

MODEL	ELECTRICALDATA							
	POWER SUPPLY 50 Hz	MOTOR TYPE	P1 MAX kW	P2 NOMINAL		In A	CAPACITOR	
				kW	HP		µF	Vc
DP 151 M	1x220-240 V ~	–	1,56	1,1	1,5	7	31,5	450
DP 151 T	3x230-400 V ~	IE3	1,5	1,1	1,5	5,4 /3,1	–	–
DP 151 T	3x230-400 V ~	IE2	1,45	1,1	1,5	4,7 /2,7	–	–
DP 251 M	1x220-240 V ~	–	1,84	1,85	2,5	8,3	40	450
DP 251 T	3x230-400 V ~	IE3	1,7	1,85	2,5	5,7/3,3	–	–
DP 251 T	3x230-400 V ~	IE2	1,78	1,85	2,5	6,6/3,8	–	–

MODEL	A	B	C	E	G	H	H1	H2	I Ø	DNA GAS	DNM GAS	DNE GAS	EJECTOR						PACKING DIMENSIONS			VOLUME (mc)	GROSS WEIGHT Kg
													A	H	H1	X	Y	Z	L/A	L/B	H		
DP 151 M-T	388	210	50	197	145	155	52	108	11	1¼"	1"	1"	97	295	143	1" G	1" G	1¼"G	427	246	307	0,03	28
DP 251 M	462	210	50	197	145	155	53	108	11	1¼"	1"	1"	97	295	143	1" G	1" G	1¼"G	522	246	307	0,04	32,5
DP 251 T	388	210	50	197	145	155	53	108	11	1¼"	1"	1"	97	295	143	1" G	1" G	1¼"G	427	246	307	0,03	27,9

GARDENJET

SELF-PRIMING CENTRIFUGAL PUMPS

TECHNICAL DATA

Operating range:
from 0.4 to 5.4 m^3/h with head up to 54 metres
Liquid quality requirements: clean, free from solid or abrasive contaminants, non-viscous, non-aggressive, uncrystallised and chemically neutral, close to the properties of water
Liquid temperature range:
from 0°C to +35°C for domestic use (EN 60335-2-41)
for other use: from 0°C to +40°C
Maximum suction depth: 8 metres
Maximum ambient temperature: +40°C
Maximum operating pressure:
8 bar (800 kPa)
6 bar (600 kPa) only for models in technocpolymer (JETCOM)
Installation: fixed in a horizontal position
Special executions on request: alternative voltages and/or frequencies
Motor protection rating: IP 44
Terminal block protection rating: IP 55
Insulation class: F
Standard input voltage: single phase 220/240 V / 50 Hz

APPLICATIONS

Self-priming electric centrifugal pump for gardening, horticulture, washing and leisure activities.
Equipped with a handle to aid in transport, a H07RN-F 2 metre power cord with plug and on-off switch.
Compact, easy to install, self-priming for pumping out pools, wells, and waterways even in the presence of air bubbles. Suitable for pumping water with low levels of sandy impurities.

CONSTRUCTIONAL FEATURES OF THE PUMP

Pump body in cast iron and motor support in die cast aluminium.
Impeller, diffuser, venturi tube in technopolymer.
Stainless steel wear ring and seal holder.
Carbon/ceramic mechanical seal.

CONSTRUCTIONAL FEATURES OF THE MOTOR

Asynchronous type, closed, with external air cooling.
Rotor mounted on oversized greased-for-life ball bearings, to guarantee low noise and long life.
Incorporated thermo-amperometric protection and permanently inserted capacitor.
Manufacture pursuant to CEI 2-3 and CEI 61-69 (EN 60335-2-41) standard.

DAB PUMPS reserve the right to make modifications without prior notice

GARDENJET

SELF-PRIMING CENTRIFUGAL PUMPS

MATERIALS

N°	PARTS*	MATERIALS
1	PUMP BODY	GJL 200 UNI EN 1561 CAST IRON
3	FRAME	DIE CAST ALUMINIUM
4	IMPELLER	PPO-GF 20 (Noryl™)
7	SHAFT WITH ROTOR	AISI 416 STAINLESS STEEL X12CrS13 UNI EN 10088 (UNI 6900: 71)
16	MECHANICAL SEAL	CARBON/CERAMIC
28	OR GASKET	NBR RUBBER
160	VENTURI DIFFUSER NOZZEL GROUP	PPO-GF 20 (Noryl™)

* In contact with liquid

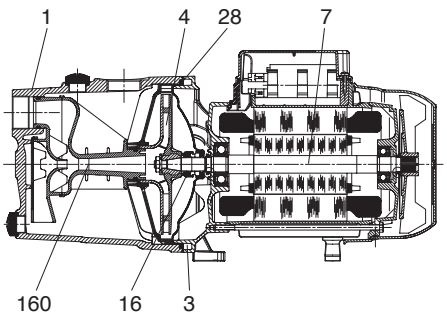

SELF PRIMING CAPACITY

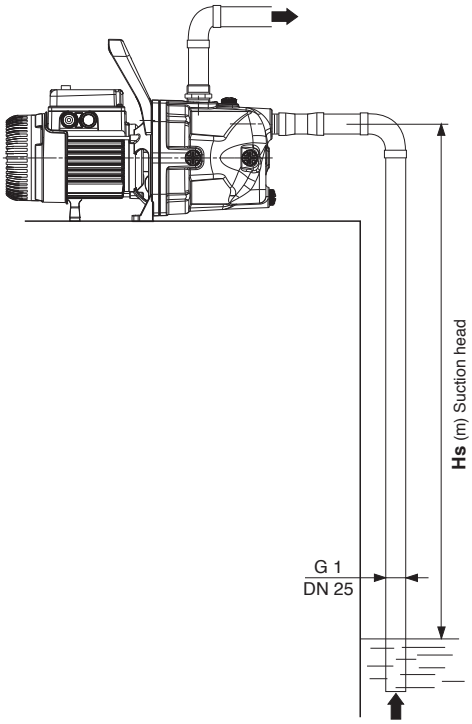

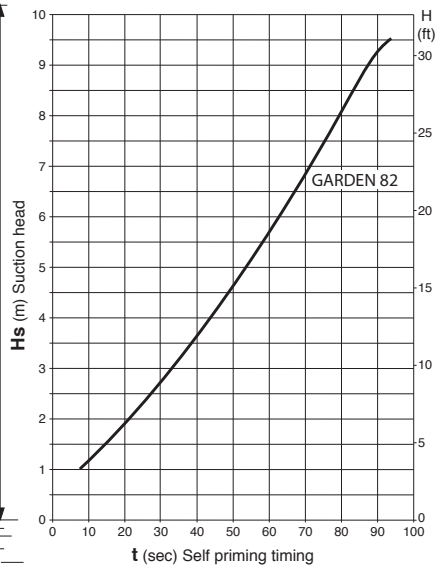

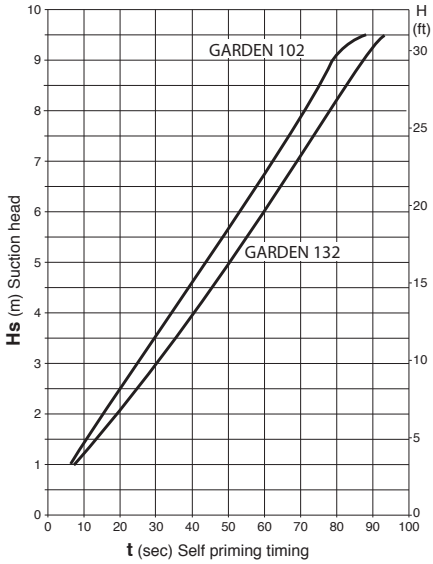

PERFORMANCE RANGE

The performance curves are based on kinematic viscosity values = 1 mm²/s and density equivalent to 1000 kg/m³. Curve tolerance according to ISO 9906.

GRAPHIC SELECTION TABLE

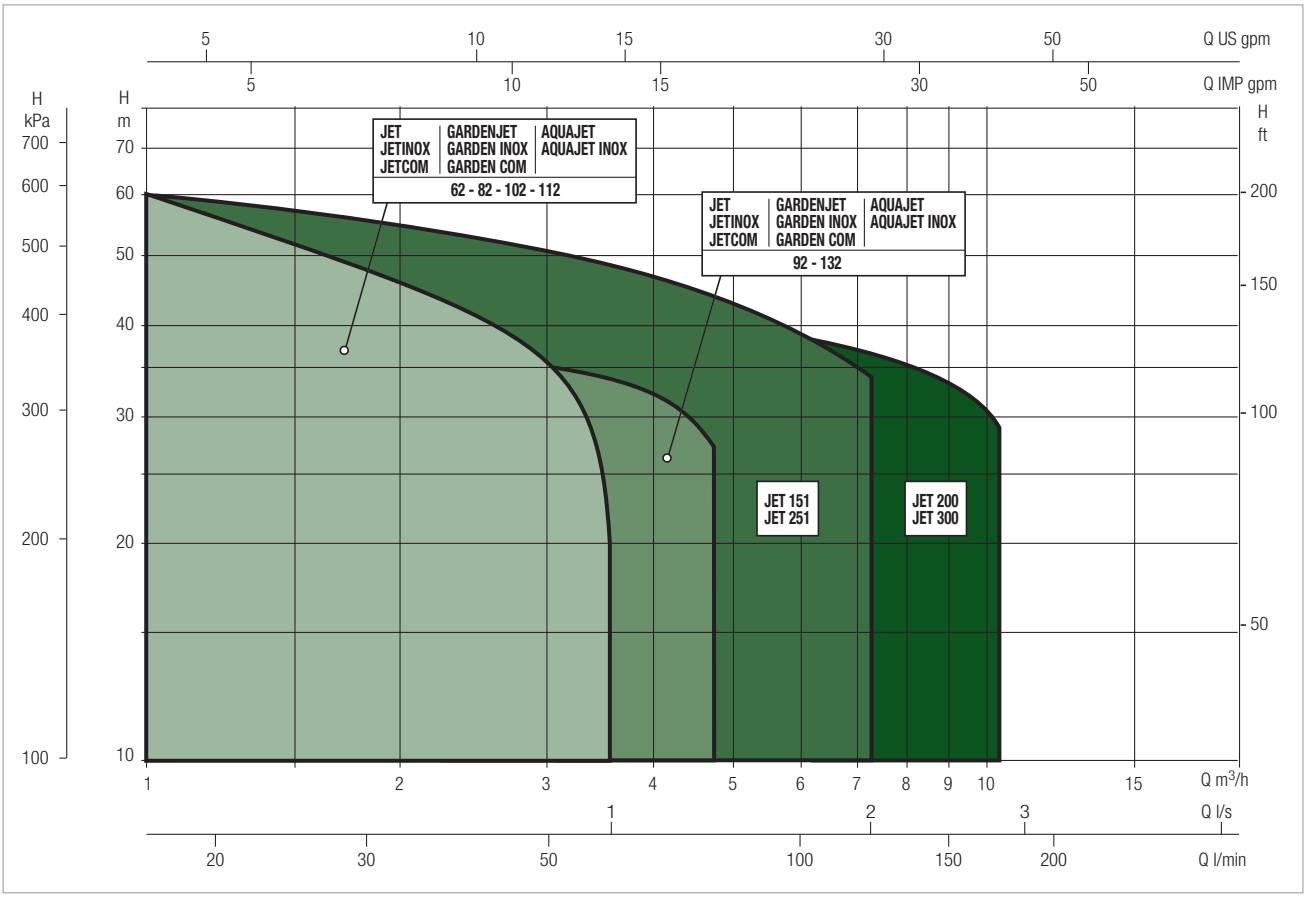

GARDENJET SELECTION TABLE

MODEL	Q=m³/h	0	0,6	1,2	1,8	2,4	3,0	3,6	4,2	4,8
	Q=l/min	0	10	20	30	40	50	60	70	80
GARDENJET 82 M	H (m)	47	40	34	30	26,2	23,5	20,3		
GARDENJET 102 M		53,8	47	41	36,3	32,4	28,8	25,8		
GARDENJET 132 M		48,3	45,6	42,8	40	37,6	35	32,5	30	27,2

DAB PUMPS reserve the right to make modifications without prior notice

GARDENJET - SELF-PRIMING CENTRIFUGAL PUMPS

Liquid temperature range pumped: from 0 °C to +35 °C - Maximum ambient temperature: +40°C

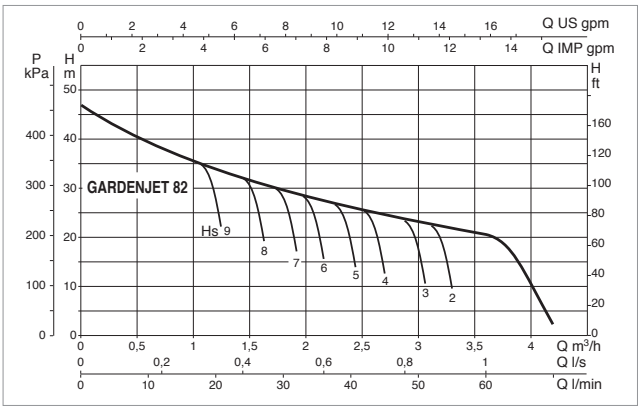

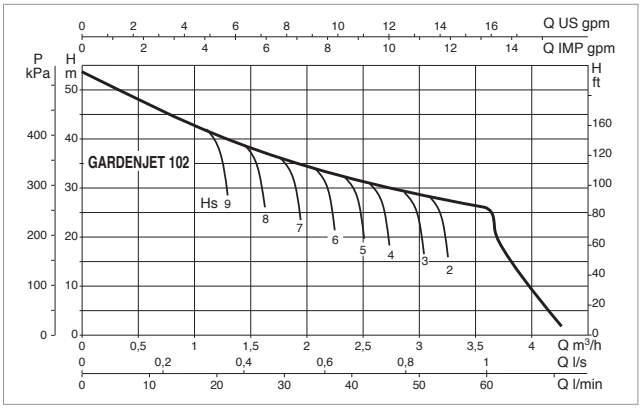

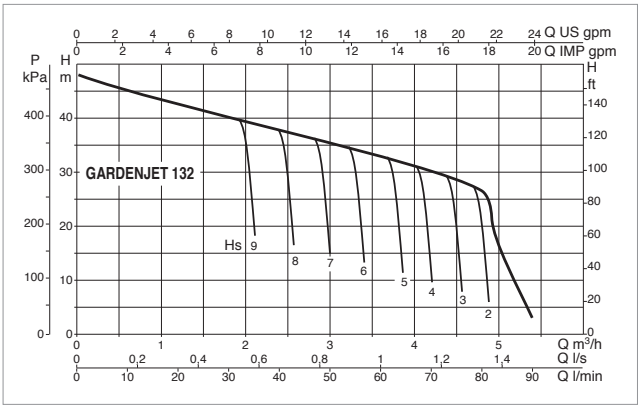

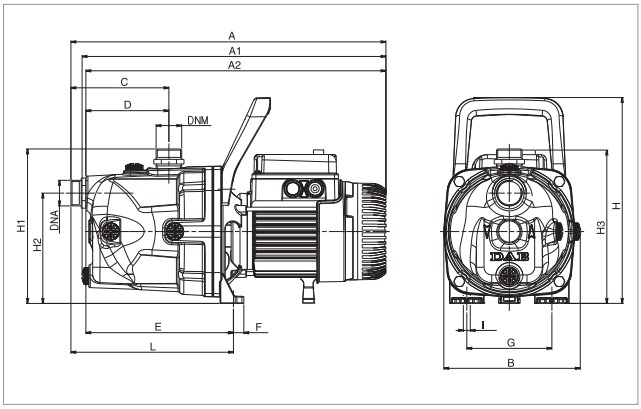

The performance curves are based on kinematic viscosity values = 1 mm²/s and density equivalent to 1000 kg/m³. Curve tolerance according to ISO 9906.

MODEL	ELECTRICAL DATA						
	POWER SUPPLY 50 Hz	P1 MAX kW	P2 NOMINAL		In A	CAPACITOR	
			kW	HP		µF	Vc
GARDENJET 82 M	1x220-240 V ~	0,85	0,6	0,8	3,8	12,5	450
GARDENJET 102 M	1x220-240 V ~	1,13	0,75	1	5,1	16	450
GARDENJET 132 M	1x220-240 V ~	1,49	1	1,36	6,6	25	450

MODEL	A	A1	A2	B	C	D	E	F	G	H	H1	H2	H3	H4	I Ø	L	DNA GAS	DNM GAS	PACKING DIMENSIONS			VOLUME (mc)	GROSS WEIGHT Kg
																			L/A	L/B	H		
GARDENJET 82 M	410	395	390	178	127	108	192	14	111	268	201	144	199	-	9	212	1 "	1 "	470	240	240	0,027	11,2
GARDENJET 102 M	429	414	409	178	127	108	192	14	111	268	200	144	209	-	9	212	1 "	1 "	470	240	240	0,027	13
GARDENJET 132 M	429	414	409	178	127	180	192	14	111	268	200	144	209	-	9	212	1 "	1 "	470	240	240	0,027	14

GARDEN INOX

SELF-PRIMING CENTRIFUGAL PUMPS

TECHNICAL DATA

Operating range:
from 0.4 to 5.4 m^3/h with head up to 54 metres
Liquid quality requirements: clean, free from solid or abrasive contaminants, non-viscous, non-aggressive, uncrystallised and chemically neutral, close to the properties of water
Liquid temperature range:
from 0°C to +35°C for domestic use (EN 60335-2-41)
for other use: from 0°C to +40°C
Maximum suction depth: 8 metres
Maximum ambient temperature: +40°C
Maximum operating pressure: 8 bar (800 kPa)
6 bar (600 kPa) only for models in technocpolymer (JETCOM)
Installation: fixed in a horizontal position
Special executions on request: alternative voltages and/or frequencies
Motor protection rating: IP 44
Terminal block protection rating: IP 55
Insulation class: F
Standard input voltage: single phase 220/240 V / 50 Hz

APPLICATIONS

Self-priming electric centrifugal pump for gardening, horticulture, washing and leisure activities.
Equipped with a handle to aid in transport, a H07RN-F 2 metre power cord with plug and on-off switch.
Compact, easy to install, self-priming for pumping out pools, wells, and waterways even in the presence of air bubbles. Suitable for pumping water with low levels of sandy impurities.

CONSTRUCTIONAL FEATURES OF THE PUMP

Pump body in stainless steel and motor support in die cast aluminium.
Impeller, diffuser, venturi tube in technopolymer.
Stainless steel wear ring and seal holder.
Carbon/ceramic mechanical seal.

CONSTRUCTIONAL FEATURES OF THE MOTOR

Asynchronous type, closed, with external air cooling.
Rotor mounted on oversized greased-for-life ball bearings, to guarantee low noise and long life.
Incorporated thermo-amperometric protection and permanently inserted capacitor.
Manufacture pursuant to CEI 2-3 and CEI 61-69 (EN 60335-2-41) standard.

DAB PUMPS reserve the right to make modifications without prior notice

GARDEN INOX

SELF-PRIMING CENTRIFUGAL PUMPS

MATERIALS

N°	PARTS*	MATERIALS
1	PUMP BODY	GJL 200 UNI EN 1561 CAST IRON
3	FRAME	DIE CAST ALUMINIUM
4	IMPELLER	PPO-GF 20 (Noryl™)
7	SHAFT WITH ROTOR	AISI 416 STAINLESS STEEL X12CrS13 UNI EN 10088 (UNI 6900: 71)
16	MECHANICAL SEAL	CARBON/CERAMIC
28	OR GASKET	NBR RUBBER
160	VENTURI DIFFUSER NOZZEL GROUP	PPO-GF 20 (Noryl™)

* In contact with liquid

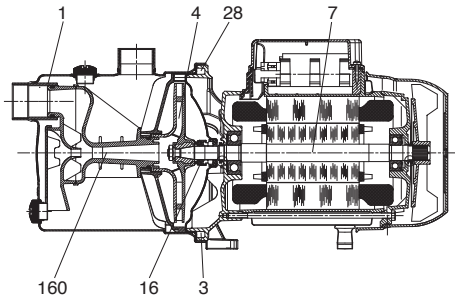

SELF PRIMING CAPACITY

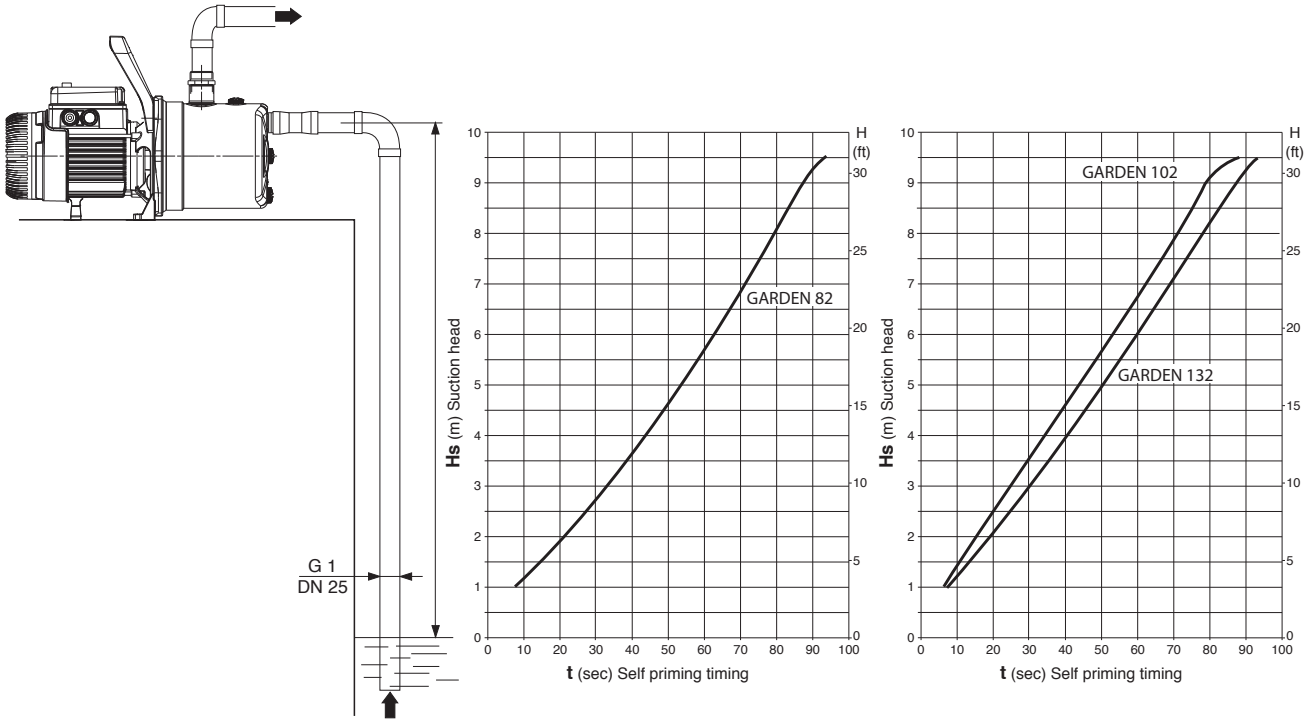

PERFORMANCE RANGE

The performance curves are based on kinematic viscosity values = 1 mm²/s and density equivalent to 1000 kg/m³. Curve tolerance according to ISO 9906.

GRAPHIC SELECTION TABLE

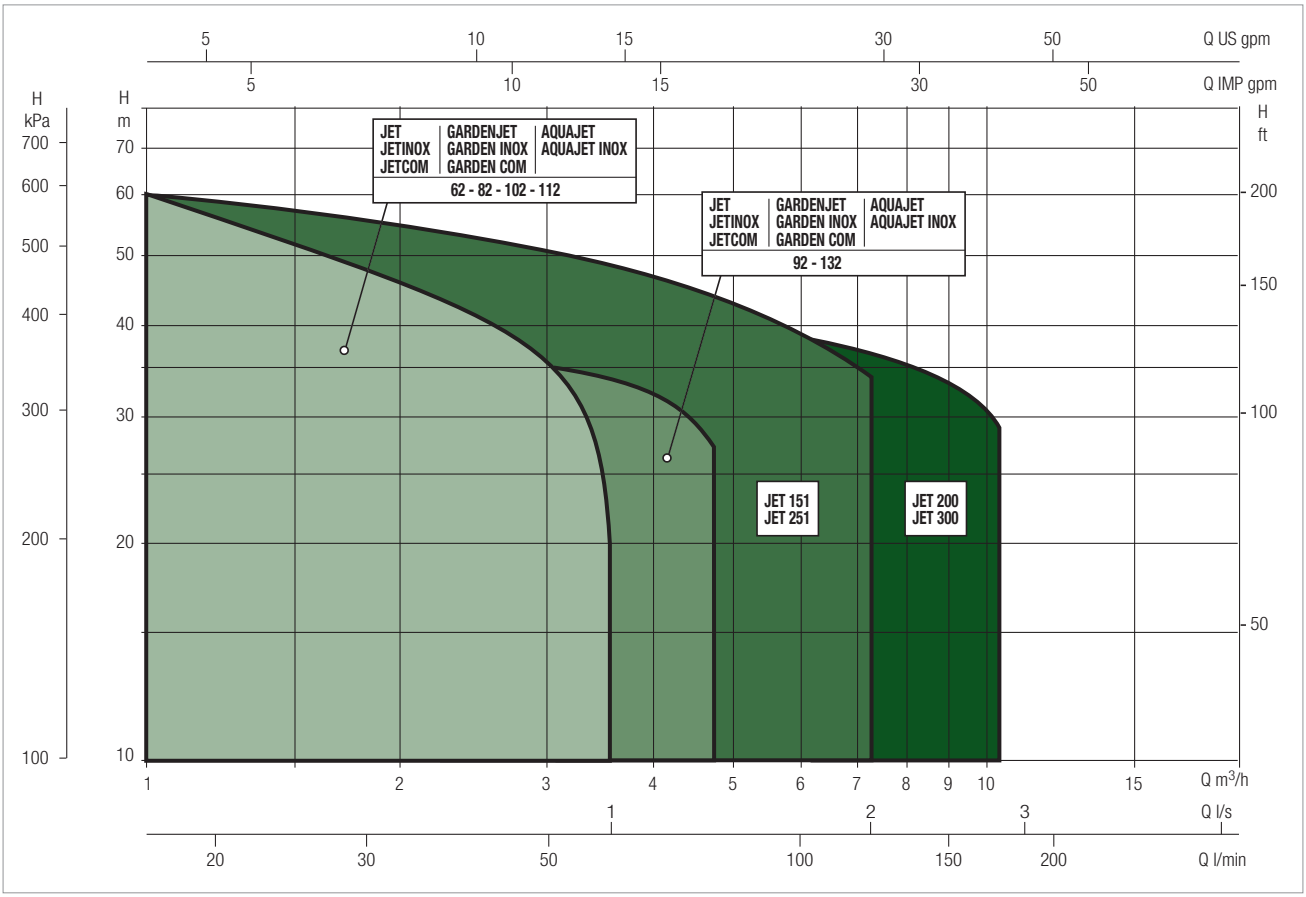

GARDEN INOX SELECTION TABLE

MODEL	Q=m³/h	0	0,6	1,2	1,8	2,4	3,0	3,6	4,2	4,8
	Q=l/min	0	10	20	30	40	50	60	70	80
GARDEN-INOX 82 M	H (m)	47	40	34	30	26,2	23,5	20,3		
GARDEN-INOX 102 M		53,8	47	41	36,3	32,4	28,8	25,8		
GARDEN-INOX 132 M		48,3	45,6	42,8	40	37,6	35	32,5	30	27,2

GARDEN INOX - SELF-PRIMING CENTRIFUGAL PUMPS

Liquid temperature range pumped: from 0 °C to +35 °C - Maximum ambient temperature: +40°C

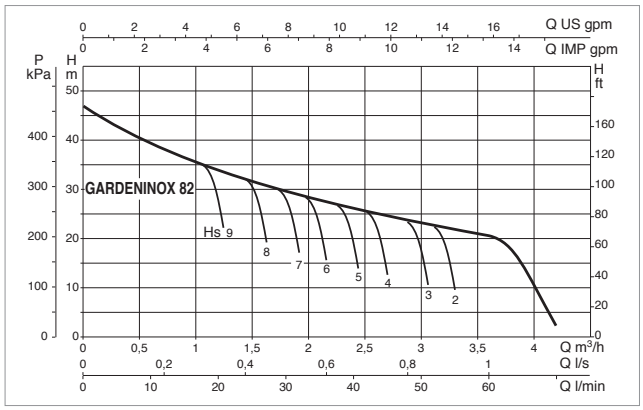

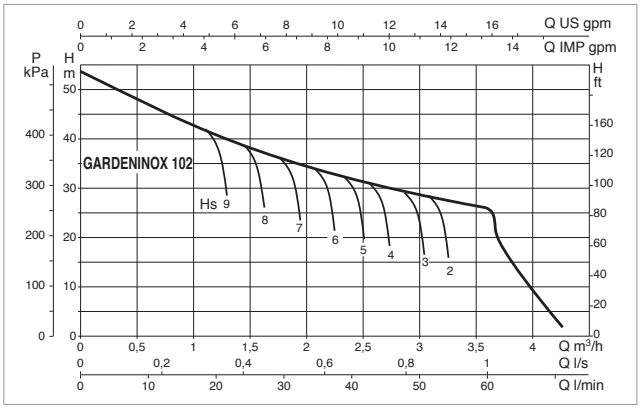

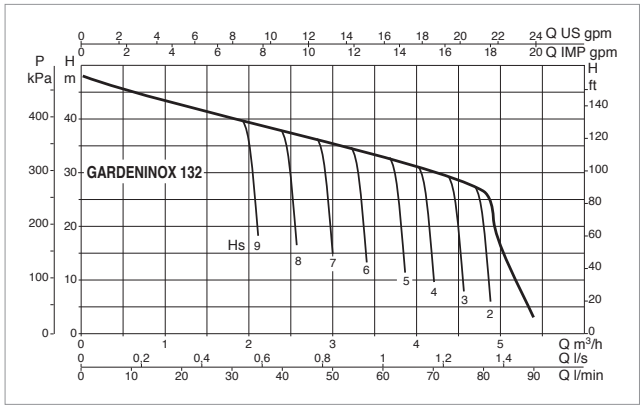

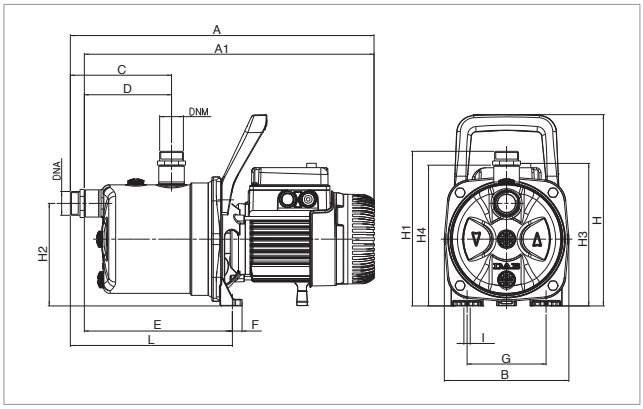

The performance curves are based on kinematic viscosity values = 1 mm²/s and density equivalent to 1000 kg/m³. Curve tolerance according to ISO 9906.

MODEL	ELECTRICAL DATA						
	POWER SUPPLY 50 Hz	P1 MAX kW	P2 NOMINAL		In A	CAPACITOR	
			kW	HP		µF	Vc
GARDEN-INOX 82 M	1x220-240 V ~	0,85	0,6	0,8	3,8	12,5	450
GARDEN-INOX 102 M	1x220-240 V ~	1,13	0,75	1	5,1	16	450
GARDEN-INOX 132 M	1x220-240 V ~	1,49	1	1,36	6,6	25	450

MODEL	A	A1	A2	B	C	D	E	F	G	H	H1	H2	H3	H4	I Ø	L	DNA GAS	DNM GAS	PACKING DIMENSIONS			VOLUME (mc)	GROSS WEIGHT Kg
																			L/A	L/B	H		
GARDEN-INOX 82 M	424	406	-	174	142	122	207	14	111	268	216	144	199	197	9	227	1 "	1 "	470	240	240	0,027	10,7
GARDEN-INOX 102 M	444	424	-	174	142	122	207	14	111	268	216	144	209	197	9	227	1 "	1 "	470	240	240	0,027	12,5
GARDEN-INOX 132 M	444	424	-	174	142	122	207	14	111	268	216	144	209	197	9	227	1 "	1 "	470	240	240	0,027	13,5

GARDEN COM

SELF-PRIMING CENTRIFUGAL PUMPS

TECHNICAL DATA

Operating range:
from 0.4 to 5.4 m^3/h with head up to 54 metres
Liquid quality requirements: clean, free from solid or abrasive contaminants, non-viscous, non-aggressive, uncrystallised and chemically neutral, close to the properties of water
Liquid temperature range:
from 0°C to +35°C for domestic use (EN 60335-2-41)
for other use: from 0°C to +40°C
Maximum suction depth: 8 metres
Maximum ambient temperature: +40°C
Maximum operating pressure: 8 bar (800 kPa)
6 bar (600 kPa) only for models in technocpolymer (JETCOM)
Installation: fixed in a horizontal position
Special executions on request: alternative voltages and/or frequencies
Motor protection rating: IP 44
Terminal block protection rating: IP 55
Insulation class: F
Standard input voltage: single phase 220/240 V / 50 Hz

APPLICATIONS

Self-priming electric centrifugal pump for gardening, horticulture, washing and leisure activities. Equipped with a handle to aid in transport, a H07RN-F 2 metre power cord with plug and on-off switch. Compact, easy to install, self-priming for pumping out pools, wells, and waterways even in the presence of air bubbles. Suitable for pumping water with low levels of sandy impurities.

CONSTRUCTIONAL FEATURES OF THE PUMP

Pump body in technocpolymer and motor support in die cast aluminium.
Impeller, diffuser, venturi tube in technopolymer.
Stainless steel wear ring and seal holder.
Carbon/ceramic mechanical seal.

CONSTRUCTIONAL FEATURES OF THE MOTOR

Asynchronous type, closed, with external air cooling.
Rotor mounted on oversized greased-for-life ball bearings, to guarantee low noise and long life.
Incorporated thermo-amperometric protection and permanently inserted capacitor.
Manufacture pursuant to CEI 2-3 and CEI 61-69 (EN 60335-2-41) standard.

DAB PUMPS reserve the right to make modifications without prior notice

GARDEN COM

SELF-PRIMING CENTRIFUGAL PUMPS

MATERIALS

N°	PARTS*	MATERIALS
1	PUMP BODY	GJL 200 UNI EN 1561 CAST IRON
3	FRAME	DIE CAST ALUMINIUM
4	IMPELLER	PPO-GF 20 (Noryl™)
7	SHAFT WITH ROTOR	AISI 416 STAINLESS STEEL X12CrS13 UNI EN 10088 (UNI 6900: 71)
16	MECHANICAL SEAL	CARBON/CERAMIC
28	OR GASKET	NBR RUBBER
160	VENTURI DIFFUSER NOZZEL GROUP	PPO-GF 20 (Noryl™)

* In contact with liquid

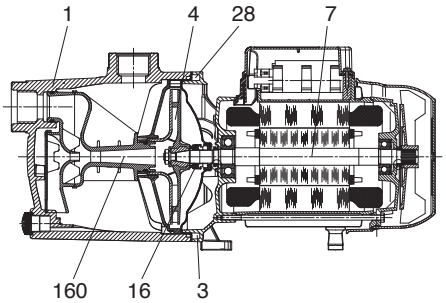

SELF PRIMING CAPACITY

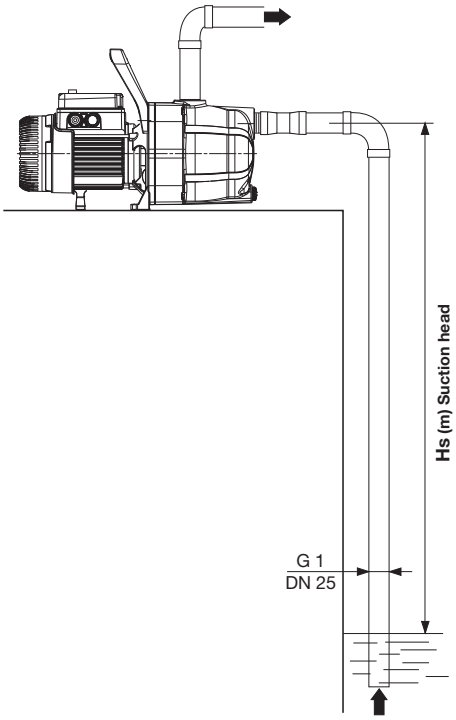

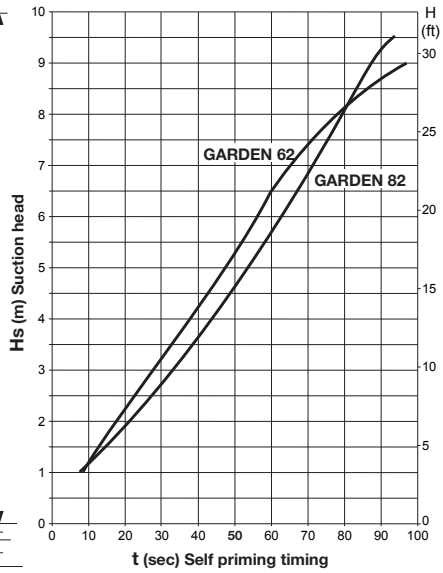

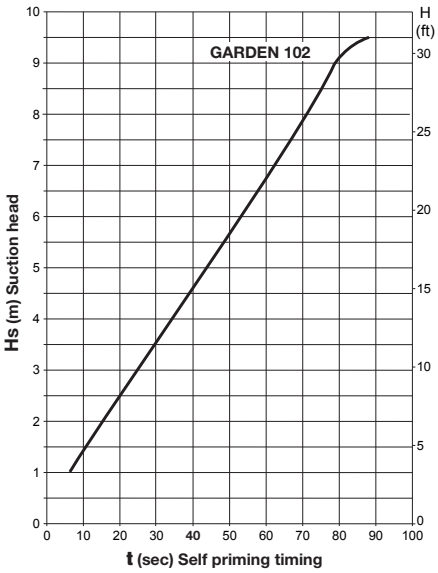

PERFORMANCE RANGE

The performance curves are based on kinematic viscosity values = 1 mm²/s and density equivalent to 1000 kg/m³. Curve tolerance according to ISO 9906.

GRAPHIC SELECTION TABLE

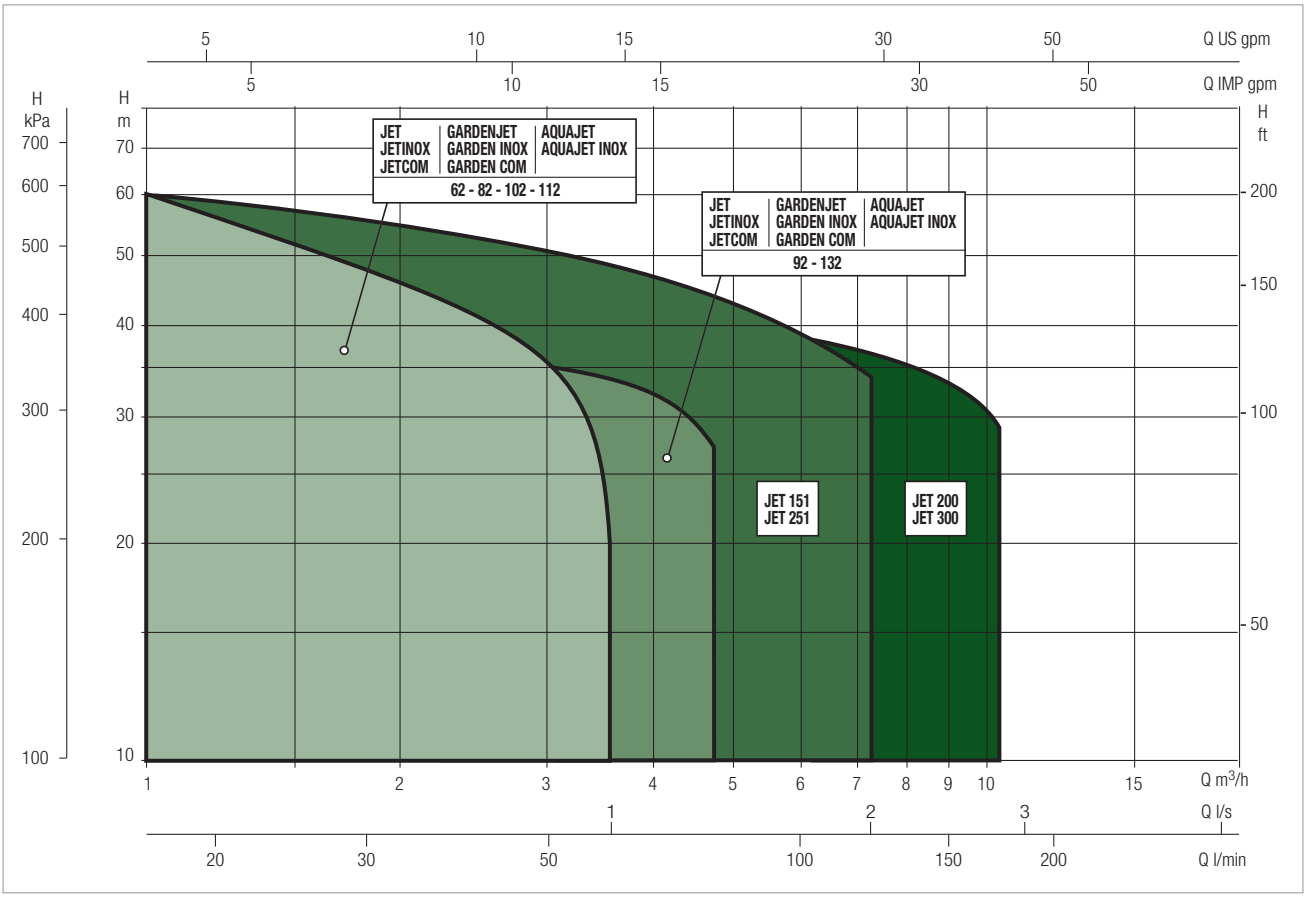

GARDEN COM SELECTION TABLE

MODEL	Q=m³/h	0	0,6	1,2	1,8	2,4	3,0	3,6
	Q=l/min	0	10	20	30	40	50	60
GARDEN-COM 62 M	H (m)	42,7	35	29,2	25,6	22,9	13	
GARDEN-COM 82 M		47	40	34	30	26,2	23,5	20,3
GARDEN-COM 102 M		53,8	47	41	36,3	32,4	28,8	25,8

DAB PUMPS reserve the right to make modifications without prior notice

GARDEN COM - SELF-PRIMING CENTRIFUGAL PUMPS

Liquid temperature range pumped: from 0 °C to +35 °C - Maximum ambient temperature: +40°C

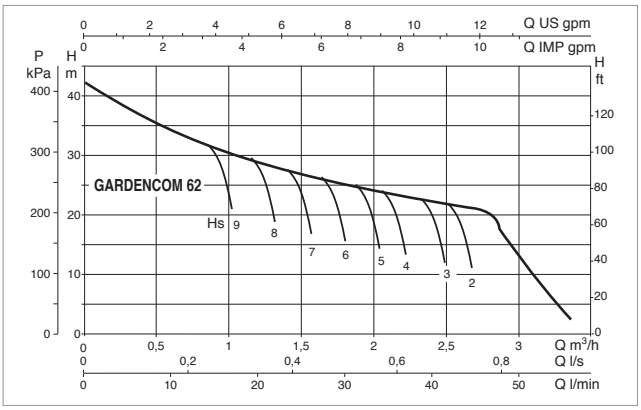

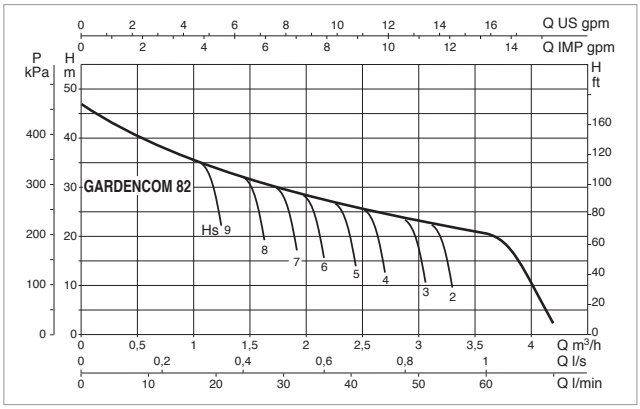

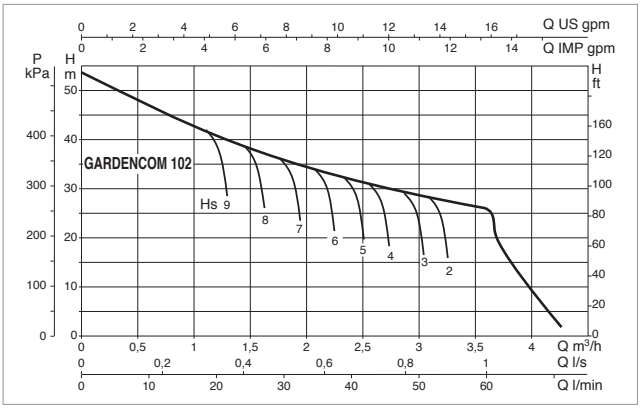

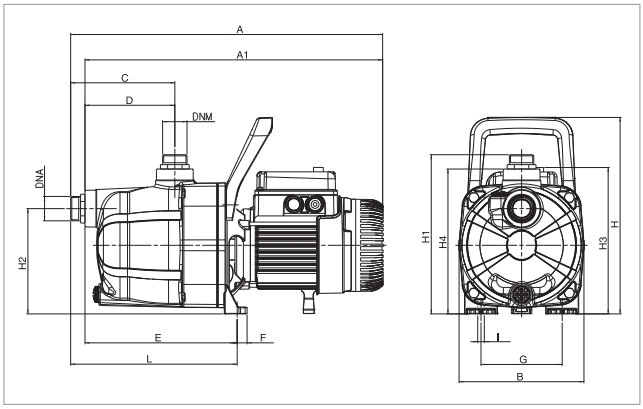

The performance curves are based on kinematic viscosity values = 1 mm²/s and density equivalent to 1000 kg/m³. Curve tolerance according to ISO 9906.

MODELLO	ELECTRICAL DATA						
	POWER SUPPLY 50 Hz	P1 MAX kW	P2 NOMINAL		In A	CAPACITOR	
			kW	HP		µF	Vc
GARDEN-COM 62 M	1x220-240 V ~	0,72	0,44	0,6	3,12	12,5	450
GARDEN-COM 82 M	1x220-240 V ~	0,85	0,6	0,8	3,8	12,5	450
GARDEN-COM 102 M	1x220-240 V ~	1,13	0,75	1	5,1	16	450

MODEL	A	A1	A2	B	C	D	E	F	G	H	H1	H2	H3	H4	I Ø	L	DNA GAS	DNM GAS	PACKING DIMENSIONS			VOLUME (mc)	GROSS WEIGHT Kg
																			L/A	L/B	H		
GARDEN-COM 62 M	425	406	-	170	142	122	208	14	111	268	217	144	199	198	9	227	1 "	1 "	470	240	240	0,027	10,7
GARDEN-COM 82 M	425	406	-	170	142	122	208	14	111	268	217	144	199	198	9	227	1 "	1 "	470	240	240	0,027	10,7
GARDEN-COM 102 M	444	425	-	170	142	122	208	14	111	268	217	144	209	203	9	227	1 "	1 "	470	240	240	0,027	12,5

EURO

MULTI-STAGE CENTRIFUGAL PUMP

TECHNICAL DATA

Operating range:
from 10 to 120 litres/min. with head up to 72 m
Liquid quality requirements: clean, free from solid or abrasive contaminants, non-viscous, non-aggressive, uncrystallised and chemically neutral, close to the properties of water
Liquid temperature range:
for domestic use: from 0°C to +35°C (EN 60335-2-41)
for other use: from 0°C to +40°C
Maximum ambient temperature: +40°C
Maximum operating pressure: 8 bar (800 kPa)
Installation: fixed or portable in a horizontal position
Motor protection rating: IP 44
Terminal block protection rating: IP 55
Insulation class: F
Standard input voltage: single phase 220-240 V / 50 Hz - 2 poles
three phase 230/400 V - 50 Hz - 2 poli

APPLICATIONS

Multi-stage centrifugal pump with horizontal shaft, featuring extremely quiet operation suitable for domestic water supply and pressurisation, irrigation of gardens and general water movement.

CONSTRUCTIONAL FEATURES OF THE PUMP

Pump body in 200 UNI ISO 185 cast iron. Motor support in die cast aluminium, with seal holder cover in AISI 304 stainless steel. Carbon/ceramic mechanical seal. Rotor shaft in AISI 304 stainless steel. Impeller and diffuser bodies and diffuser in technopolymer. Stainless steel wear ring.

CONSTRUCTIONAL FEATURES OF THE MOTOR

Asynchronous, continuous service motor.
Incorporated thermo-amperometric protection and permanently inserted capacitor in the single phase version.
Overload protection to be provided by the user for the three-phase version.

MATERIALS

N°	PARTS *	MATERIALS
1	PUMP BODY	200 UNI ISO 185 CAST IRON
4	IMPELLER	TECHNOPOLYMER
6	DIFFUSER	TECHNOPOLYMER
7	SHAFT WITH ROTOR	AISI 304 STAINLESS STEEL X5CrNi 1810 UNI 6900/71
16	MECHANICAL SEAL	CARBON/CERAMIC
28	OR GASKET	NBR
36	SEAL HOLDER COVER	AISI 304 STAINLESS STEEL X5CrNi 1810 UNI 6900/71
98	DIFFUSER BODY	TECHNOPOLYMER
304	REAR DISC	TECHNOPOLYMER

* In contact with liquid

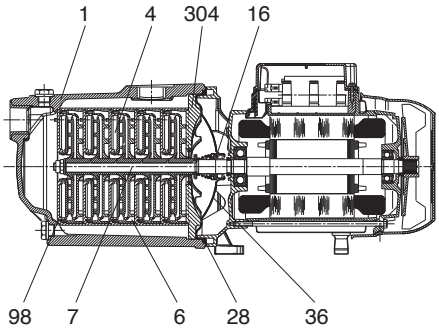

EURO

MULTISTAGE CENTRIFUGAL PUMPS

PERFORMANCE RANGE

The performance curves are based on kinematic viscosity values = 1 mm²/s and density equivalent to 1000 kg/m³. Curve tolerance according to ISO 9906.

GRAPHIC SELECTION TABLE

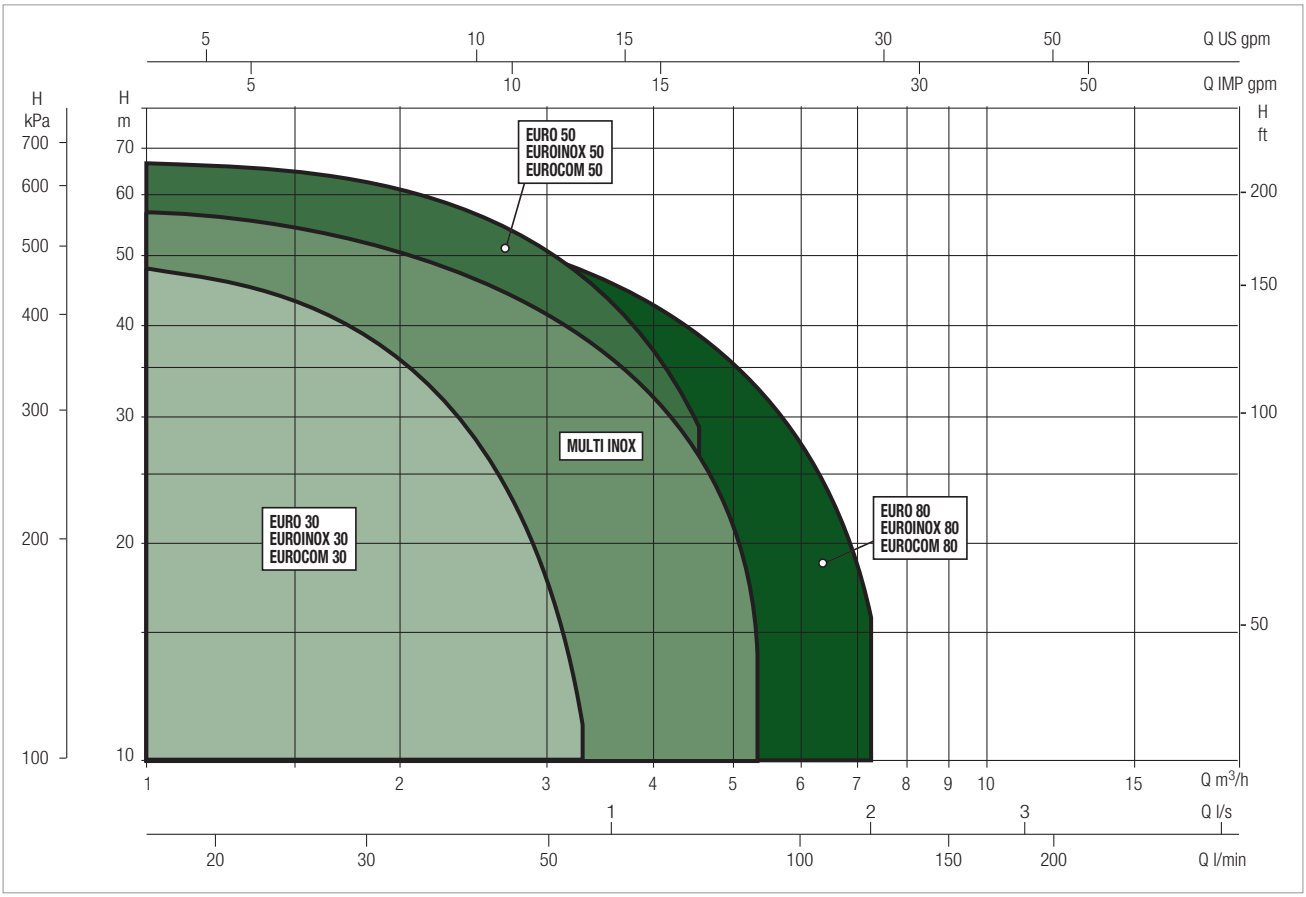

EURO SELECTION TABLE

MODEL	Q=m³/h	0	0,6	1,2	1,8	2,4	3,0	3,6	4,2	4,8	6	7,2
	Q=l/min	0	10	20	30	40	50	60	70	80	100	120
EURO 25/30 M	H (m)	34,4	31,7	28,3	23,5	17,5	11					
EURO 30/30 M		46	42,2	37,8	31,2	23,3	14,3					
EURO 40/30 M		57	52,7	47	38,8	29	17,7					
EURO 30/50 M		42,5	40,2	38,2	36,2	33,8	30	24,8	19,5	14		
EURO 40/50 M		57,5	55,3	52,8	50,1	47,1	42,7	35,8	28	19		
EURO 40/50 T		57,5	55,3	52,8	50,1	47,1	42,7	35,8	28	19		
EURO 50/50 M		72	68,5	65,5	62,1	58,2	52,2	43,6	34,5	26		
EURO 50/50 T		72	68,5	65,5	62,1	58,2	52,2	43,6	34,5	26		
EURO 30/80 M		47		46,5	45	43,5	41	38	34,5	31	23	12
EURO 30/80 T		47		46,5	45	43,5	41	38	34,5	31	23	12
EURO 40/80 M		59		57	56	54	51	47	43,5	39	29,5	16,5
EURO 40/80 T		59		57	56	54	51	47	43,5	39	29,5	16,5

EURO 30 - SELF-PRIMING CENTRIFUGAL PUMPS

Liquid temperature range pumped: from 0 °C to +35 °C - **Maximum ambient temperature:** +40°C

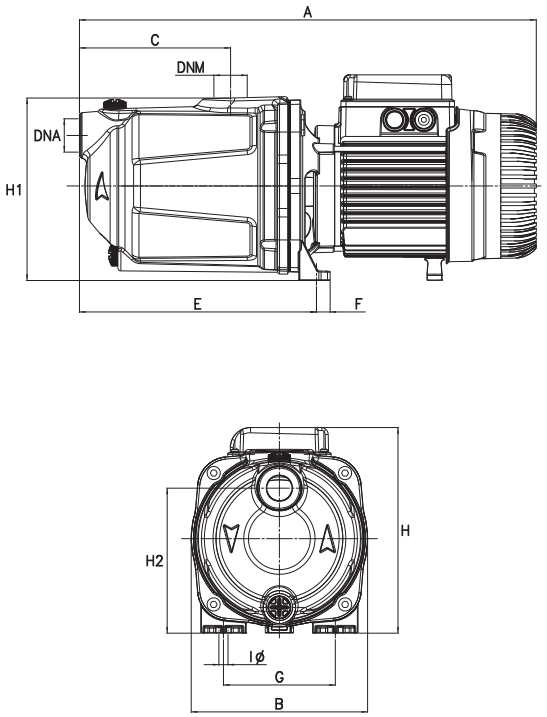

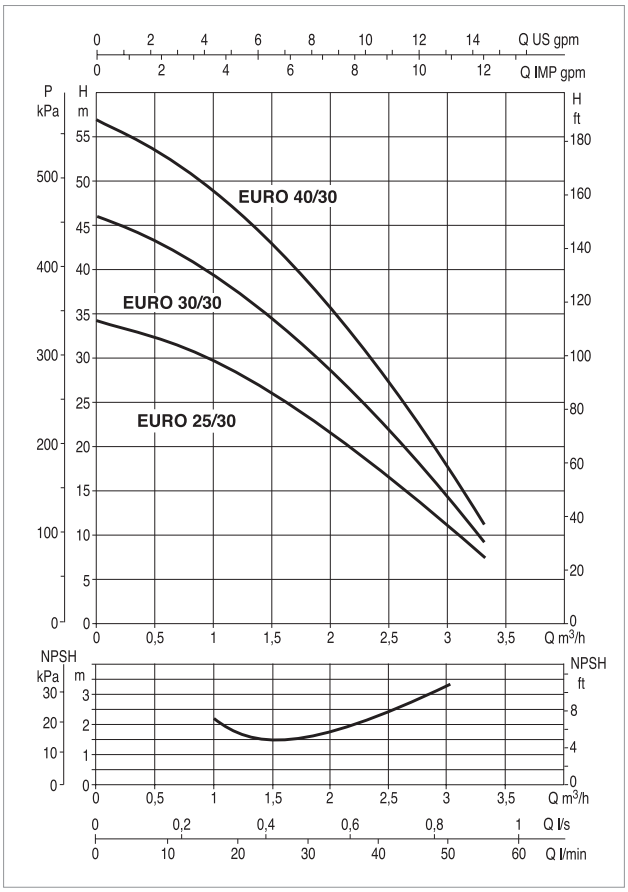

The performance curves are based on the kinematic viscosity values = 1 mm²/s and density equivalent to 1000 kg/m³. Curve tolerance according to ISO 9906.

MODEL	ELECTRICAL DATA							
	N° IMPELLER	POWER SUPPLY 50 Hz	P1 MAX KW	P2 NOMINAL		In A	CAPACITOR	
				kW	HP		µF	Vc
EURO 25/30 M	3	1x220-240 V ~	0,52	0,37	0,5	2,4	10	450
EURO 30/30 M	4	1x220-240 V ~	0,83	0,45	0,6	3,9	12,5	450
EURO 40/30 M	5	1x220-240 V ~	0,88	0,55	0,75	3,9	12,5	450

MODEL	A	B	C	E	F	G	I Ø	H	H1	H2	DNA GAS	DNM GAS	PACKING DIMENSIONS			VOLUME (mc)	GROSS WEIGHT Kg
													L/A	L/B	H		
EURO 25/30 M	378	175	94,5	180	13,5	111	9	194	179	143,5	1 "	1 "	440	206	245	0,025	10,7
EURO 30/30 M	433	175	149,5	235	13,5	111	9	194	179	143,5	1 "	1 "	480	212	265	0,031	12,7
EURO 40/30 M	433	175	149,5	235	13,5	111	9	194	179	143,5	1 "	1 "	480	212	265	0,031	12,8

EURO 50 - SELF-PRIMING CENTRIFUGAL PUMPS

Liquid temperature range pumped: from 0 °C to +35 °C - **Maximum ambient temperature:** +40°C

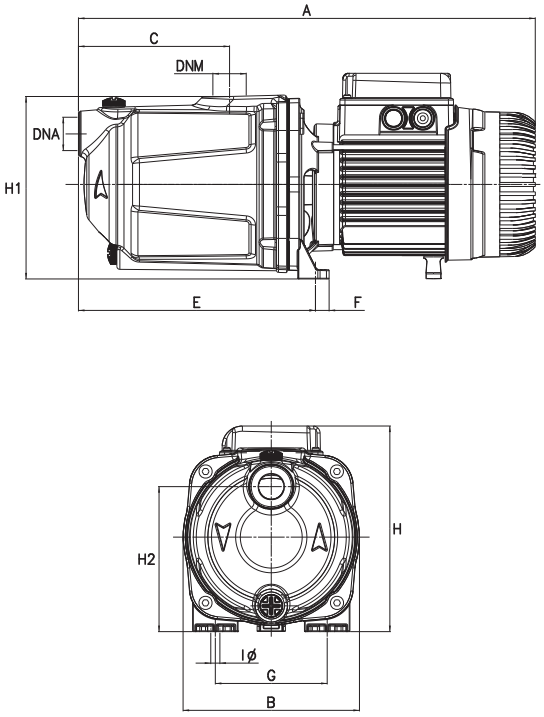

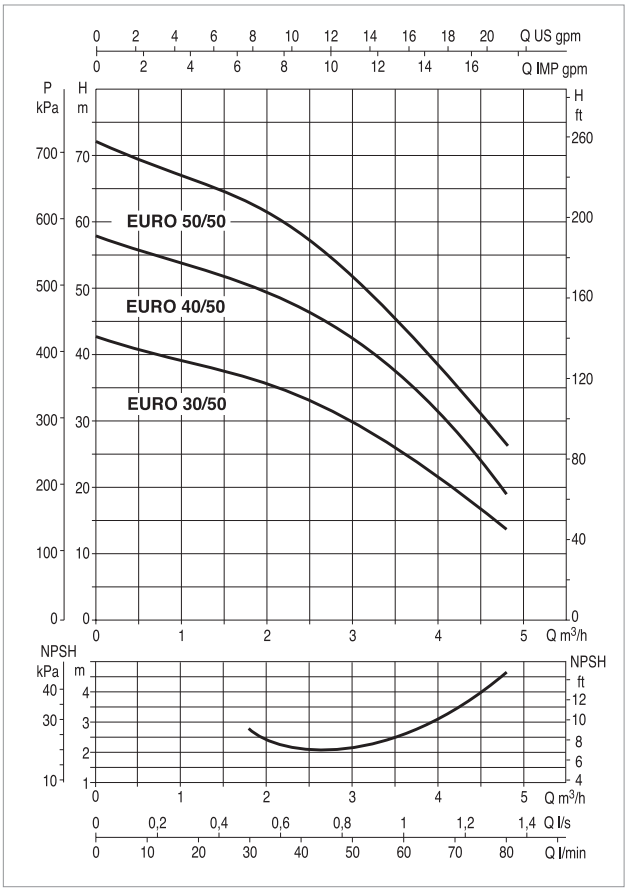

The performance curves are based on the kinematic viscosity values = 1 mm^2/s and density equivalent to 1000 kg/m^3. Curve tolerance according to ISO 9906.

MODEL	ELECTRICAL DATA								
	N° IMPELLER	POWER SUPPLY 50 Hz	MOTOR TYPE	P1 MAX KW	P2 NOMINAL		In A	CAPACITOR	
					kW	HP		µF	Vc
EURO 30/50 M	3	1x220-240 V ~	-	0,88	0,55	0,75	3,9	12,5	450
EURO 40/50 M	4	1x220-240 V ~	-	1,2	0,75	1	5,3	25	450
EURO 40/50 T	4	3x230-400 V ~	IE3	1,07	0,75	1	3,6/2,1	-	-
EURO 40/50 T	4	3x230-400 V ~	IE2	1,18	0,75	1	3,8/2,2	-	-
EURO 50/50 M	5	1x220-240 V ~	-	1,48	1	1,36	6,3	25	450
EURO 50/50 T	5	3x230-400 V ~	IE3	1,3	1	1,36	4,1/2,4	-	-
EURO 50/50 T	5	3x230-400 V ~	IE2	1,44	1	1,36	4,4/2,5	-	-

MODEL	A	B	C	E	F	G	I Ø	H	H1	H2	DNA GAS	DNM GAS	PACKING DIMENSIONS			VOLUME (mc)	GROSS WEIGHT Kg
													L/A	L/B	H		
EURO 30/50 M	378	175	94,5	180	13,5	111	9	194	179	143,5	1 "	1 "	440	206	245	0,025	11,7
EURO 40/50 M	452	175	149,5	235	13,5	111	9	204	179	143,5	1 "	1 "	480	212	265	0,031	15,6
EURO 40/50 T	468	175	149,5	235	13,5	111	9	204	179	143,5	1 "	1 "	560	240	227	0,031	15,6
EURO 50/50 M	452	175	149,5	235	13,5	111	9	204	179	143,5	1 "	1 "	480	212	265	0,031	16,2
EURO 50/50 T	468	175	149,5	235	13,5	111	9	204	179	143,5	1 "	1 "	560	240	227	0,031	16,2

EURO 80 - SELF-PRIMING CENTRIFUGAL PUMPS

Liquid temperature range pumped: from 0 °C to +35 °C - **Maximum ambient temperature:** +40°C

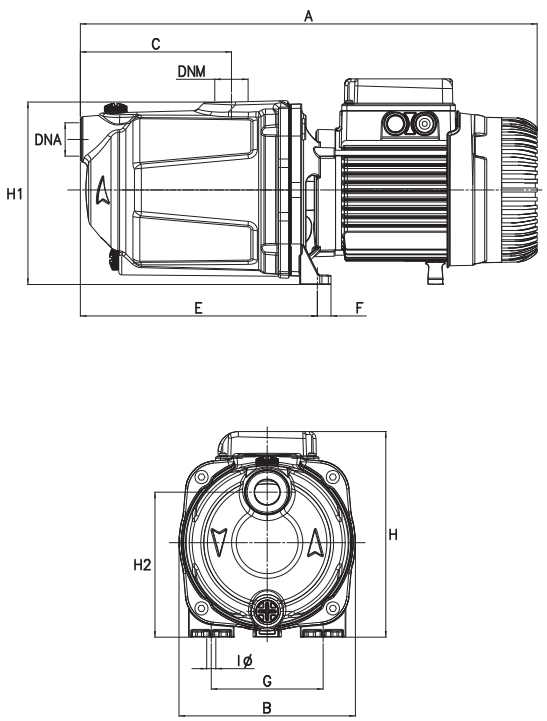

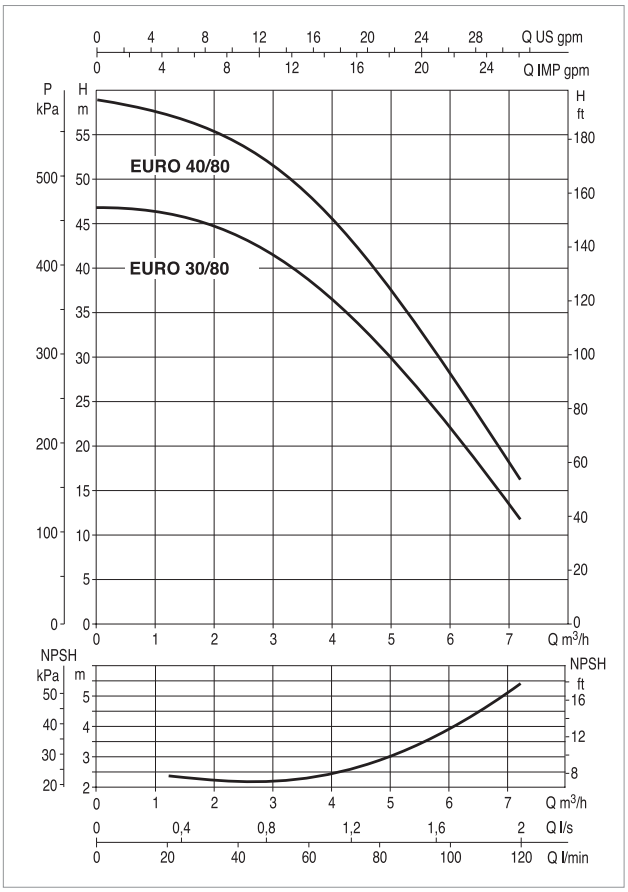

The performance curves are based on the kinematic viscosity values = 1 mm²/s and density equivalent to 1000 kg/m³. Curve tolerance according to ISO 9906.

MODEL	ELECTRICAL DATA								
	N° IMPELLER	POWER SUPPLY 50 Hz	MOTOR TYPE	P1 MAX KW	P2 NOMINAL		In A	CAPACITOR	
					kW	HP		µF	Vc
EURO 30/80 M	4	1x220-240 V ~	-	1,2	0,8	1,1	5,2	25	450
EURO 30/80 T	4	3x230-400 V ~	IE3	1,06	0,8	1,1	3,6/2,1	-	-
EURO 30/80 T	4	3x230-400 V ~	IE2	1,88	0,8	1,1	3,8/2,2	-	-
EURO 40/80 M	5	1x220-240 V ~	-	1,48	1	1,36	6,3	25	450
EURO 40/80 T	5	3x230-400 V ~	IE3	1,3	1	1,36	4,1/2,4	-	-
EURO 40/80 T	5	3x230-400 V ~	IE2	1,44	1	1,36	4,4/2,5	-	-

MODEL	A	B	C	E	F	G	I Ø	H	H1	H2	DNA GAS	DNM GAS	PACKING DIMENSIONS			VOLUME (mc)	GROSS WEIGHT Kg
													L/A	L/B	H		
EURO 30/80 M	452	175	149,5	235	13,5	111	9	204	179	143,5	1 "	1 "	440	212	265	0,031	15,6
EURO 30/80 T	468	175	149,5	235	13,5	111	9	204	179	143,5	1 "	1 "	560	240	227	0,031	15,6
EURO 40/80 M	452	175	149,5	235	13,5	111	9	204	179	143,5	1 "	1 "	480	212	265	0,031	16,2
EURO 40/80 T	468	175	149,5	235	13,5	111	9	204	179	143,5	1 "	1 "	560	240	227	0,031	16,2

EUROINOX

MULTISTAGE CENTRIFUGAL PUMPS

TECHNICAL DATA

Operating range:
from 10 to 120 litres/min. with head up to 72 m
Liquid quality requirements: clean, free from solid or abrasive contaminants, non-viscous, non-aggressive, uncrystallised and chemically neutral, close to the properties of water
Liquid temperature range: from 0°C to +35°C for domestic use (EN 60335-2-41)
Maximum ambient temperature: +40°C
Maximum operating pressure: 8 bar (800 kPa)
Installation: fixed or portable in a horizontal position
Motor protection rating: IP 44
Terminal block protection rating: IP 55
Insulation class: F
Standard input voltage: single phase 220/240 V / 50 Hz
three phase 230/400 V - 50 Hz

APPLICATIONS

Multi-stage centrifugal pump with horizontal shaft, with excellent suction capacity even in the presence of air bubbles, featuring extremely quiet operation suitable for domestic water supply and pressurisation, irrigation of gardens and general water movement.

CONSTRUCTIONAL FEATURES OF THE PUMP

Pump body in stainless steel. Motor support in die cast aluminium, with seal holder cover in AISI 304 stainless steel. Carbon/ceramic mechanical seal.
Rotor shaft in AISI 304 stainless steel.
Impeller and diffuser bodies and diffuser in technopolymer.
Stainless steel wear ring.

CONSTRUCTIONAL FEATURES OF THE MOTOR

Asynchronous, continuous service motor.
Incorporated thermo-amperometric protection and permanently inserted capacitor in the single phase version.
Overload protection to be provided by the user for the three-phase version.

MATERIALS

N°	PARTS*	MATERIALS
1	PUMP BODY	AISI 304 STAINLESS STEEL X5CRNI 1810 UNI 6900/71
4	IMPELLER	TECHNOPOLYMER
6	DIFFUSER	TECHNOPOLYMER
7	SHAFT WITH ROTOR	AISI 304 STAINLESS STEEL X5CrNi 1810 UNI 6900/71
16	MECHANICAL SEAL	CARBON/CERAMIC
28	OR GASKET	NBR
36	SEAL HOLDER COVER	AISI 304 STAINLESS STEEL X5CRNI 1810 UNI 6900/71
98	DIFFUSER BODY	TECHNOPOLYMER
304	REAR DISC	TECHNOPOLYMER
305	FRONT DISC	TECHNOPOLYMER

* In contact with liquid

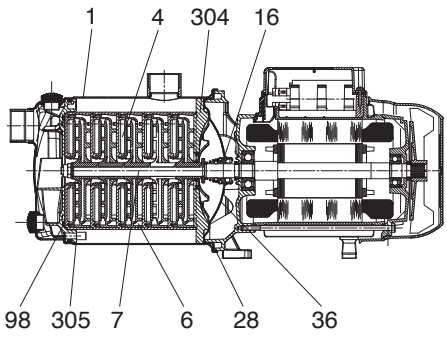

PERFORMANCE RANGE

The performance curves are based on kinematic viscosity values = 1 mm²/s and density equivalent to 1000 kg/m³. Curve tolerance according to ISO 9906.

GRAPHIC SELECTION TABLE

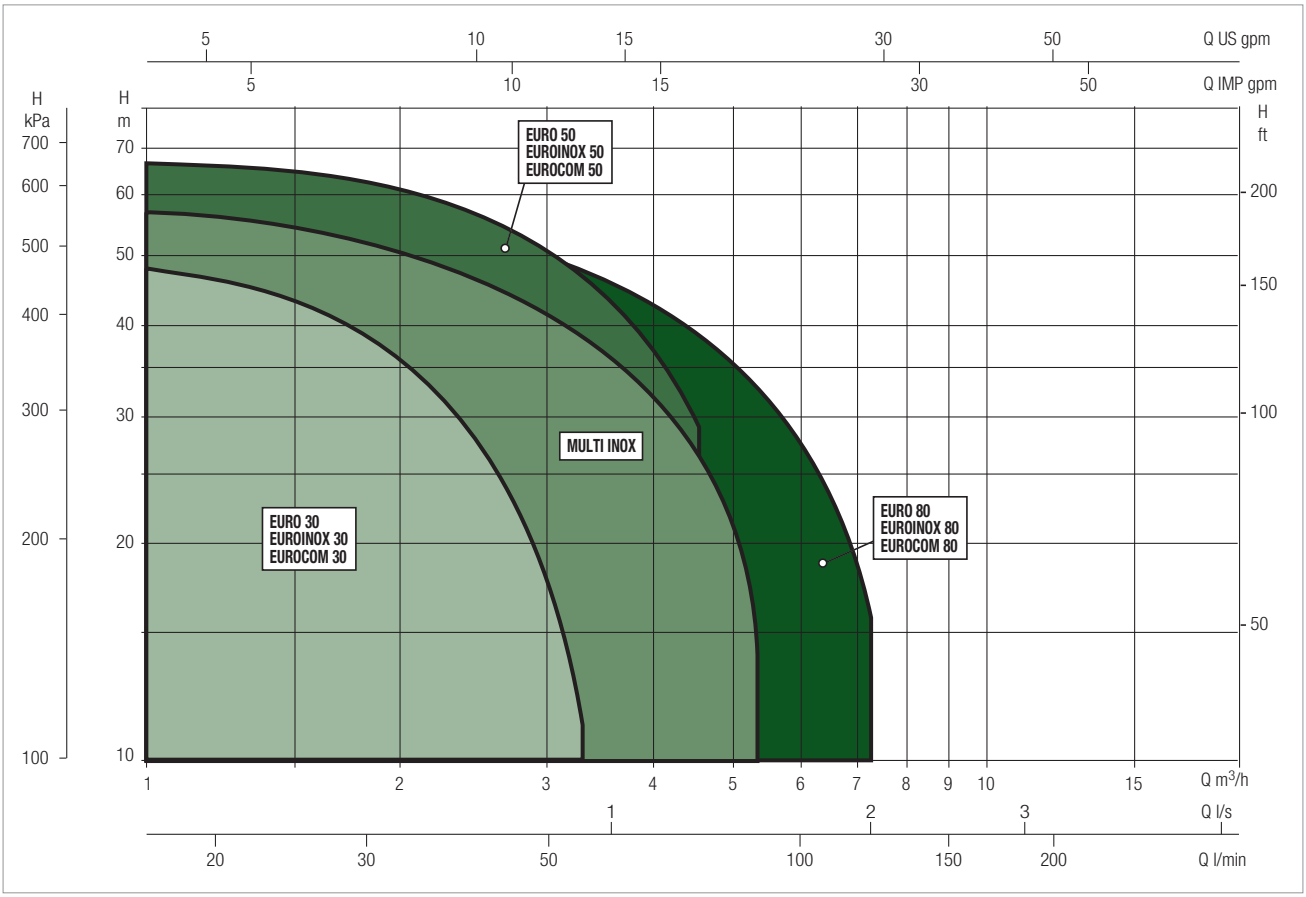

EUROINOX SELECTION TABLE

MODEL	Q=m³/h	0	0,6	1,2	1,8	2,4	3,0	3,6	4,2	4,8	6	7,2
	Q=l/min	0	10	20	30	40	50	60	70	80	100	120
EUROINOX 25/30 M	H (m)	34	31,7	28,3	23,5	17,5	11					
EUROINOX 30/30 M		46	42,2	37,8	31,2	23,3	14,3					
EUROINOX 40/30 M		57	52,7	47	38,8	29	17,7					
EUROINOX 30/50 M		42	40,2	38,2	36,2	33,8	30	24,8	19,5	14		
EUROINOX 30/50 T		42	40,2	38,2	36,2	33,8	30	24,8	19,5	14		
EUROINOX 40/50 M		58	55,3	52,8	50,1	47,1	42,7	35,8	28	19		
EUROINOX 40/50 T		58	55,3	52,8	50,1	47,1	42,7	35,8	28	19		
EUROINOX 50/50 M		72	68,5	65,5	62,1	58,2	52,2	43,6	34,5	26		
EUROINOX 50/50 T		72	68,5	65,5	62,1	58,2	52,2	43,6	34,5	26		
EUROINOX 30/80 M		47	-	46,5	45	43,5	41	38	34,5	31	23	12
EUROINOX 30/80 T		47	-	46,5	45	43,5	41	38	34,5	31	23	12
EUROINOX 40/80 M		59	-	57	56	54	51	47	43,5	39	29,5	16,5
EUROINOX 40/80 T		59	-	57	56	54	51	47	43,5	39	29,5	16,5

DAB PUMPS reserve the right to make modifications without prior notice

EUROINOX 30 - SELF-PRIMING CENTRIFUGAL PUMPS

Liquid temperature range pumped: from 0 °C to +35 °C - Maximum ambient temperature: +40°C

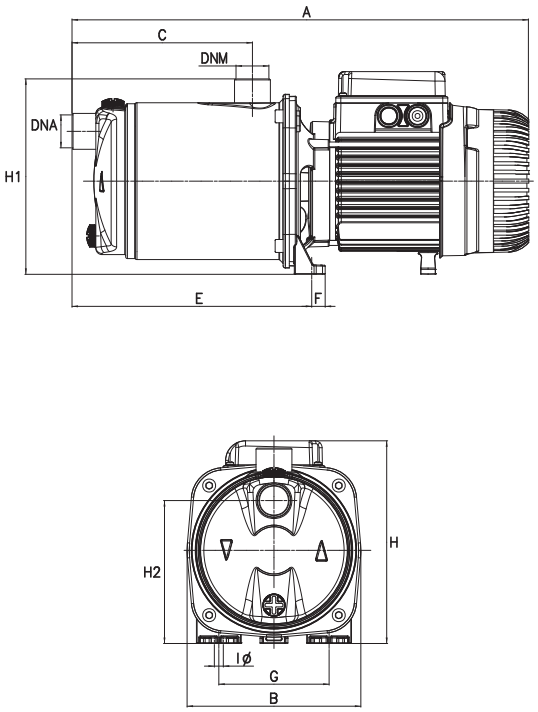

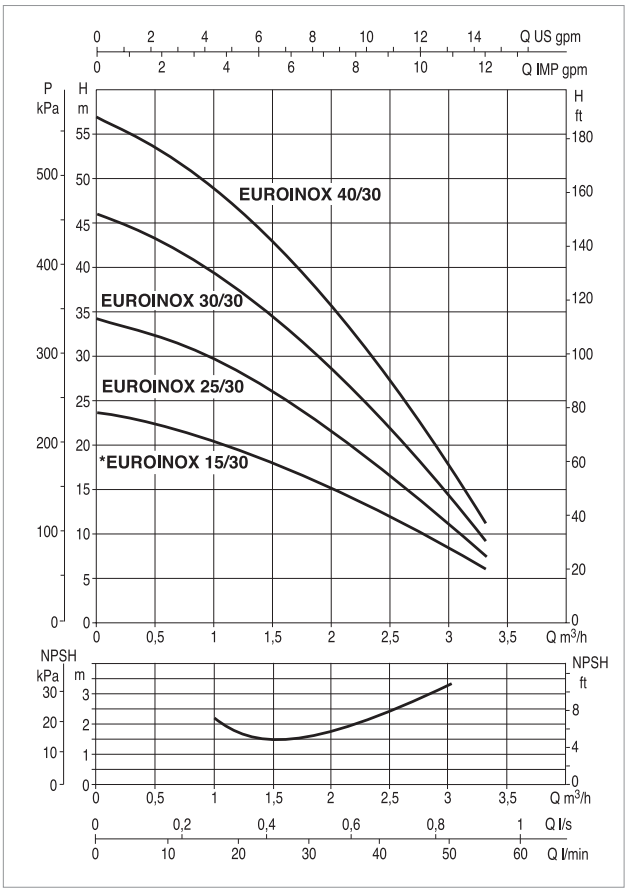

The performance curves are based on the kinematic viscosity values = 1 mm²/s and density equivalent to 1000 kg/m³. Curve tolerance according to ISO 9906.

MODEL	ELECTRICAL DATA							
	N° IMPELLER	POWER SUPPLY 50 Hz	P1 MAX KW	P2 NOMINAL		In A	CAPACITOR	
				kW	HP		µF	Vc
EUROINOX 25/30 M	3	1x220-240 V ~	0,52	0,37	0,5	2,4	10	450
EUROINOX 30/30 M	4	1x220-240 V ~	0,72	0,45	0,6	3,2	12,5	450
EUROINOX 40/30 M	5	1x220-240 V ~	0,88	0,55	0,75	3,9	12,5	450

MODEL	A	B	C	E	F	G	I Ø	H	H1	H2	DNA GAS	DNM GAS	PACKING DIMENSIONS			VOLUME (mc)	GROSS WEIGHT Kg
													L/A	L/B	H		
EUROINOX 25/30 M	384	174	108	186	13,5	111	9	193	196	143	1 "	1 "	440	206	245	0,025	9,7
EUROINOX 30/30 M	439	174	166	241	13,5	111	9	193	196	143	1 "	1 "	480	212	265	0,031	11,7
EUROINOX 40/30 M	439	174	166	241	13,5	111	9	193	196	143	1 "	1 "	480	212	265	0,031	11,9

EUROINOX 50 - SELF-PRIMING CENTRIFUGAL PUMPS

Liquid temperature range pumped: from 0 °C to +35 °C - **Maximum ambient temperature:** +40°C

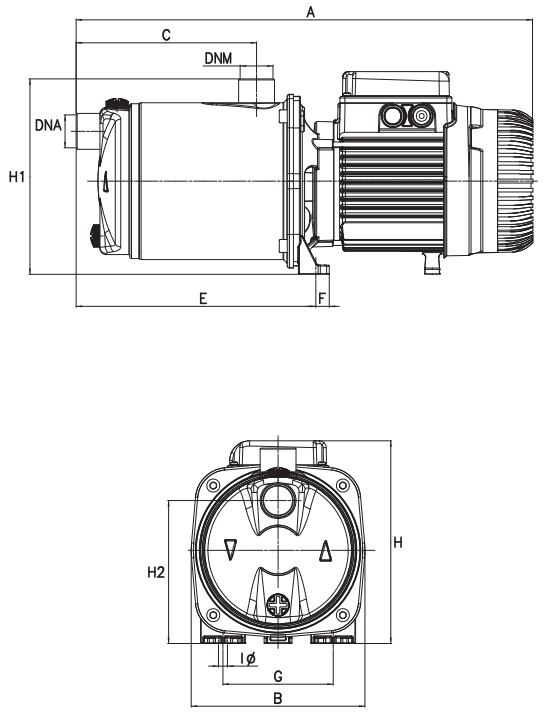

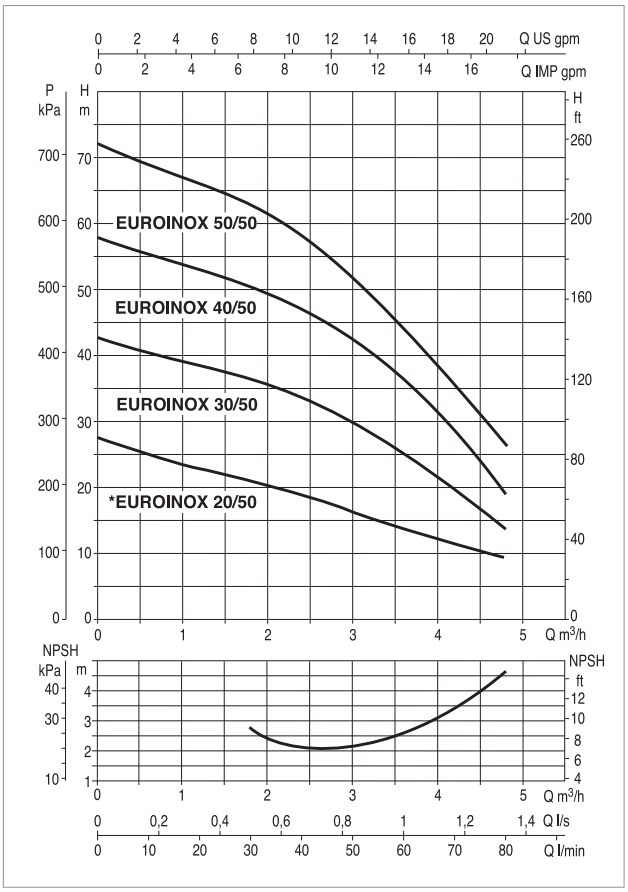

The performance curves are based on the kinematic viscosity values = 1 mm²/s and density equivalent to 1000 kg/m³. Curve tolerance according to ISO 9906.

MODEL	ELECTRICAL DATA								
	N° IMPELLER	POWER SUPPLY 50 Hz	MOTOR TYPE	P1 MAX KW	P2 NOMINAL		In A	CAPACITOR	
					kW	HP		µF	Vc
EUROINOX 30/50 M	3	1x220-240 V ~	-	0,88	0,55	0,75	3,9	12,5	450
EUROINOX 30/50 T	3	3x230-400 V ~	-	0,87	0,55	0,75	2,8/1,6	-	-
EUROINOX 40/50 M	4	1x220-240 V ~	-	1,2	0,75	1	5,3	25	450
EUROINOX 40/50 T	4	3x230-400 V ~	IE3	1,07	0,75	1	3,6/2,1	-	-
EUROINOX 40/50 T	4	3x230-400 V ~	IE2	1,18	0,75	1	3,8/2,2	-	-
EUROINOX 50/50 M	5	1x220-240 V ~	-	1,48	1	1,36	6,3	25	450
EUROINOX 50/50 T	5	3x230-400 V ~	IE3	1,3	1	1,36	4,1/2,4	-	-
EUROINOX 50/50 T	5	3x230-400 V ~	IE2	1,44	1	1,36	4,4/2,5	-	-

MODEL	A	B	C	E	F	G	I Ø	H	H1	H2	DNA GAS	DNM GAS	PACKING DIMENSIONS			VOLUME (mc)	GROSS WEIGHT Kg
													L/A	L/B	H		
EUROINOX 30/50 M - T	384	174	108	186	13,5	111	9	193	196	143	1 "	1 "	440	206	245	0,025	10,5
EUROINOX 40/50 M	458	174	166	241	13,5	111	9	203	196	143	1 "	1 "	480	212	265	0,031	14,6
EUROINOX 40/50 T	474	174	166	241	13,5	111	9	203	196	143	1 "	1 "	560	240	227	0,031	14,6
EUROINOX 50/50 M	458	174	166	241	13,5	111	9	203	196	143	1 "	1 "	480	212	265	0,031	15,1
EUROINOX 50/50 T	474	174	166	241	13,5	111	9	203	196	143	1 "	1 "	560	240	227	0,031	15,1

DAB PUMPS reserve the right to make modifications without prior notice

EUROINOX 80 - SELF-PRIMING MULTISTAGE CENTRIFUGAL PUMPS

Liquid temperature range pumped: from 0 °C to +35 °C - Maximum ambient temperature: +40°C

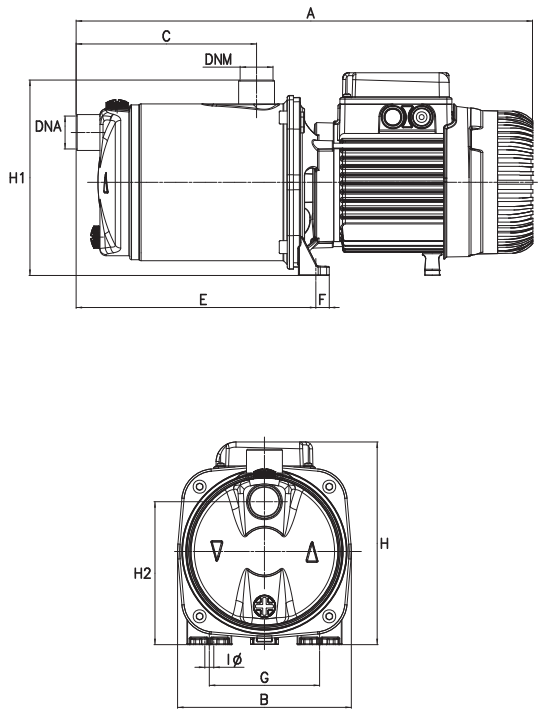

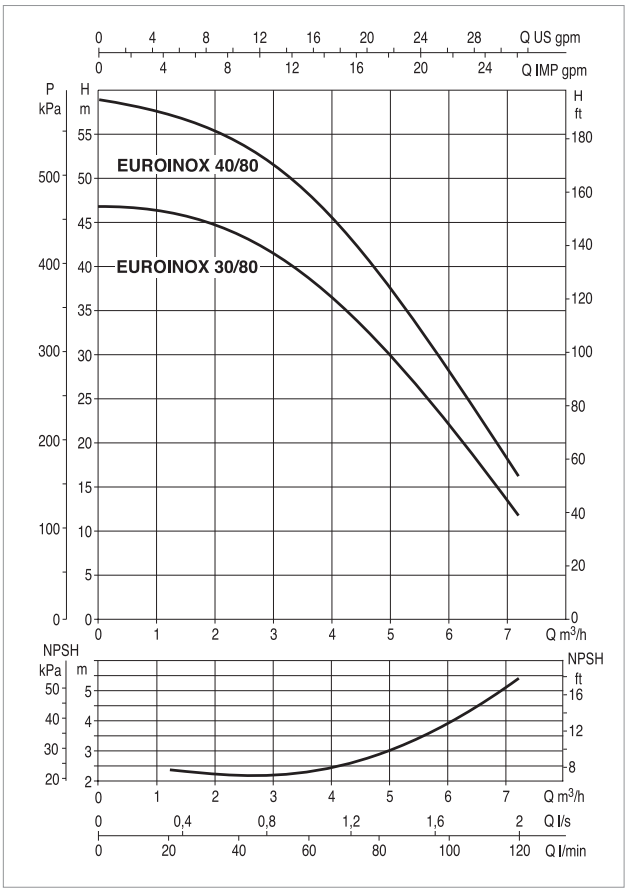

The performance curves are based on the kinematic viscosity values = 1 mm²/s and density equivalent to 1000 kg/m³. Curve tolerance according to ISO 9906.

MODEL	ELECTRICAL DATA								
	N° IMPELLER	POWER SUPPLY 50 Hz	MOTOR TYPE	P1 MAX KW	P2 NOMINAL		In A	CAPACITOR	
					kW	HP		µF	Vc
EUROINOX 30/80 M	4	1x220-240 V ~	-	1,2	0,8	1,1	5,2	25	450
EUROINOX 30/80 T	4	3x230-400 V ~	IE3	1,06	0,8	1,1	3,6/2,06	-	-
EUROINOX 30/80 T	4	3x230-400 V ~	IE2	1,18	0,8	1,1	3,8/2,2	-	-
EUROINOX 40/80 M	5	1x220-240 V ~	-	1,48	1	1,36	6,3	25	450
EUROINOX 40/80 T	5	3x230-400 V ~	IE3	1,3	1	1,36	4,1/2,4	-	-
EUROINOX 40/80 T	5	3x230-400 V ~	IE2	1,44	1	1,36	4,4/2,5	-	-

MODEL	A	B	C	E	F	G	I Ø	H	H1	H2	DNA GAS	DNM GAS	PACKING DIMENSIONS			VOLUME (mc)	GROSS WEIGHT Kg
													L/A	L/B	H		
EUROINOX 30/80 M	458	174	166	241	13,5	111	9	203	196	143	1 "	1 "	480	212	265	0,031	14,6
EUROINOX 30/80 T	474	174	166	241	13,5	111	9	203	196	143	1 "	1 "	560	240	227	0,031	14,6
EUROINOX 40/80 M	458	174	166	241	13,5	111	9	203	196	143	1 "	1 "	480	212	265	0,031	15,1
EUROINOX 40/80 T	474	174	166	241	13,5	111	9	203	196	143	1 "	1 "	560	240	227	0,031	15,1

EUROCOM

MULTISTAGE CENTRIFUGAL PUMPS

TECHNICAL DATA

Operating range:
from 10 to 120 litres/min. with head up to 72 m
Liquid quality requirements: clean, free from solid or abrasive contaminants, non-viscous, non-aggressive, uncrystallised and chemically neutral, close to the properties of water
Liquid temperature range:
for domestic use: from 0°C to +35°C (EN 60335-2-41)
for other use: from 0°C to +40°C
Maximum ambient temperature: +40°C
Maximum operating pressure: 6 bar (600 kPa)
Installation: fixed or portable in a horizontal position
Motor protection rating: IP 44
Terminal block protection rating: IP 55
Insulation class: F
Standard input voltage: single phase 220/240 V - 50 Hz
three phase 230/400 V - 50 Hz

APPLICATIONS

Multi-stage centrifugal pump with horizontal shaft, featuring extremely quiet operation suitable for domestic water supply and pressurisation, irrigation of gardens and general water movement.

CONSTRUCTIONAL FEATURES OF THE PUMP

Pump body in technocpolymer. Motor support in die cast aluminium, with seal holder cover in AISI 304 stainless steel. Carbon/ceramic mechanical seal. Rotor shaft in AISI 304 stainless steel. Impeller and diffuser bodies and diffuser in technopolymer. Stainless steel wear ring.

CONSTRUCTIONAL FEATURES OF THE MOTOR

Asynchronous, continuous service motor.
Incorporated thermo-amperometric protection and permanently inserted capacitor in the single phase version.
Overload protection to be provided by the user for the three-phase version.

MATERIALS

N°	PARTS*	MATERIALS
1	PUMP BODY	TECHNOPOLYMER
4	IMPELLER	TECHNOPOLYMER
6	DIFFUSER	TECHNOPOLYMER
7	SHAFT WITH ROTOR	AISI 304 STAINLESS STEEL X5CrNi 1810 UNI 6900/71
16	MECHANICAL SEAL	CARBON/CERAMIC
28	OR GASKET	NBR
36	SEAL HOLDER COVER	AISI 304 STAINLESS STEEL X5CRNI 1810 UNI 6900/71
98	DIFFUSER BODY	TECHNOPOLYMER
304	REAR DISC	TECHNOPOLYMER

* In contact with liquid

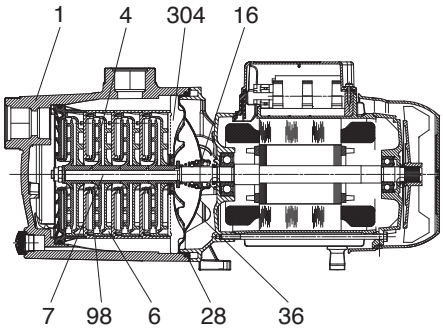

EUROCOM

MULTISTAGE CENTRIFUGAL PUMPS

PERFORMANCE RANGE

The performance curves are based on kinematic viscosity values = 1 mm²/s and density equivalent to 1000 kg/m³. Curve tolerance according to ISO 9906.

GRAPHIC SELECTION TABLE

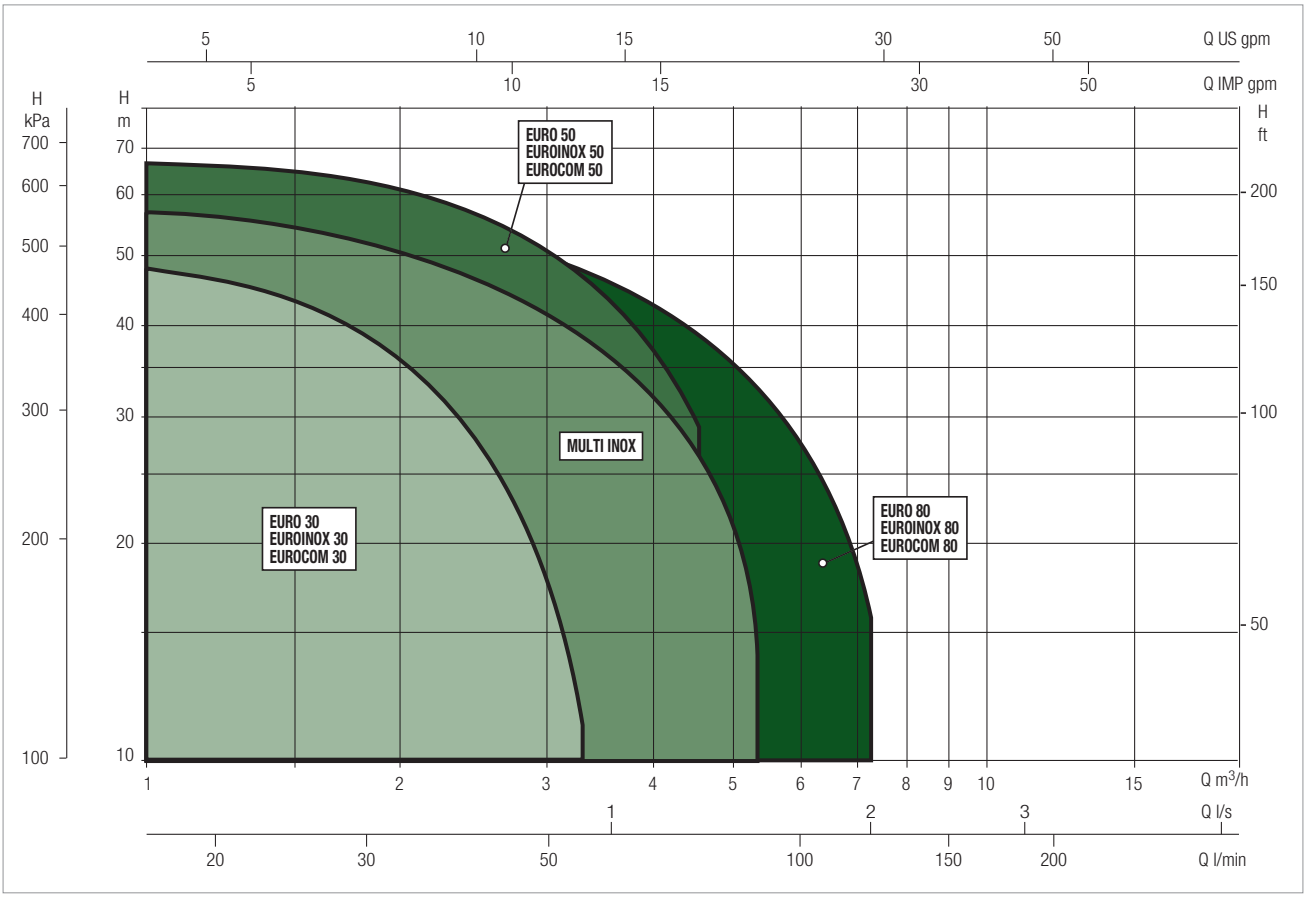

EUROCOM SELECTION TABLE

MODEL	Q=m³/h	0	0,6	1,2	1,8	2,4	3,0	3,6	4,2	4,8	6	7,2
	Q=l/min	0	10	20	30	40	50	60	70	80	100	120
EUROCOM 25/30 M	H (m)	34,4	31,7	28,3	23,5	17,5	11					
EUROCOM 30/50 M		42,2	40,2	38,2	36,2	33,8	30	24,8	19,5	14		
EUROCOM 40/50 M		57,7	55,3	52,8	50,1	47,1	42,7	35,8	28	19,2		
EUROCOM 40/50 T		57,7	55,3	52,8	50,1	47,1	42,7	35,8	28	19,2		
EUROCOM 30/80 T		47		46,5	45	43,5	41	38	34,5	31	23	12

EUROCOM 30 - SELF-PRIMING MULTISTAGE CENTRIFUGAL PUMPS

Liquid temperature range pumped: from 0 °C to +35 °C - **Maximum ambient temperature:** +40°C

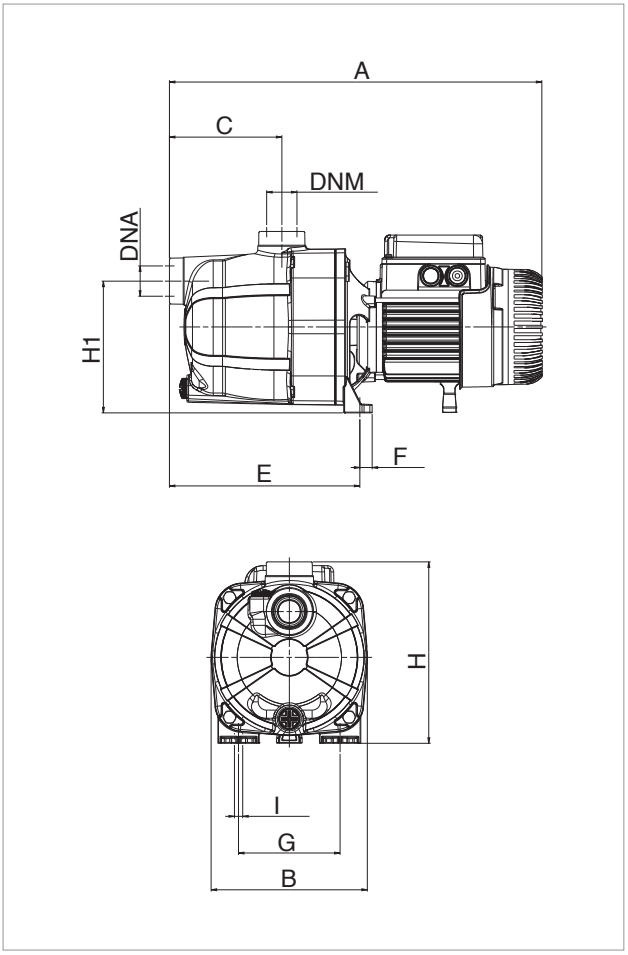

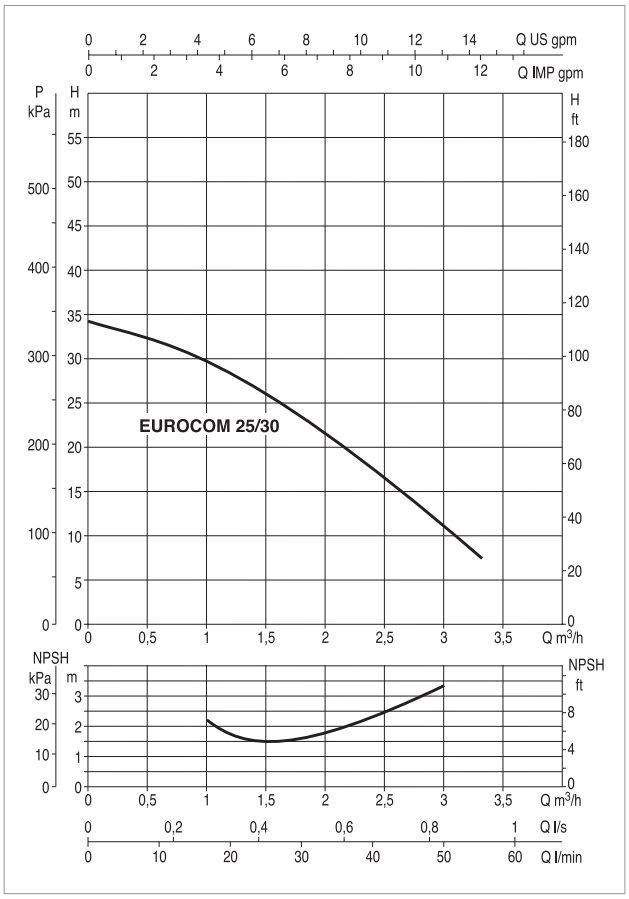

The performance curves are based on the kinematic viscosity values = 1 mm²/s and density equivalent to 1000 kg/m³. Curve tolerance according to ISO 9906.

MODEL	ELECTRICAL DATA							
	N° IMPELLER	POWER SUPPLY 50 Hz	P1 MAX KW	P2 NOMINAL		In A	CAPACITOR	
				kW	HP		µF	Vc
EUROCOM 25/30 M	3	1x220-240 V ~	0,52	0,37	0,5	2,4	10	450

MODEL	A	B	C	E	F	G	I Ø	H	H1	H2	DNA GAS	DNM GAS	PACKING DIMENSIONS			VOLUME (mc)	GROSS WEIGHT Kg
													L/A	L/B	H		
EUROCOM 25/30 M	406	170	122	208	14	111	9	198	144	-	1 "	1 "	470	240	240	0,027	8

EUROCOM 50 - SELF-PRIMING MULTISTAGE CENTRIFUGAL PUMPS

Liquid temperature range pumped: from 0 °C to +35 °C - Maximum ambient temperature: +40°C

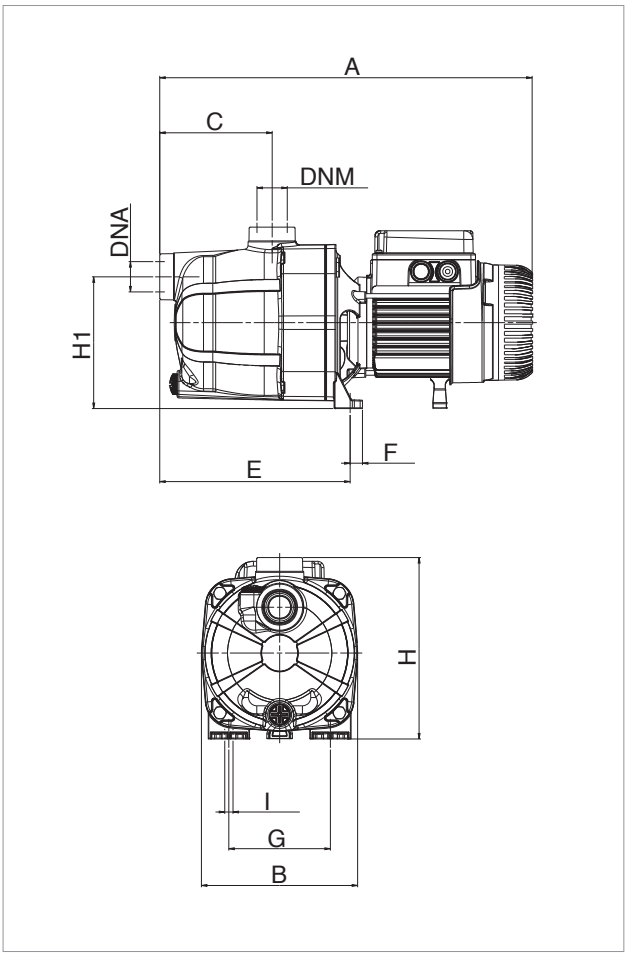

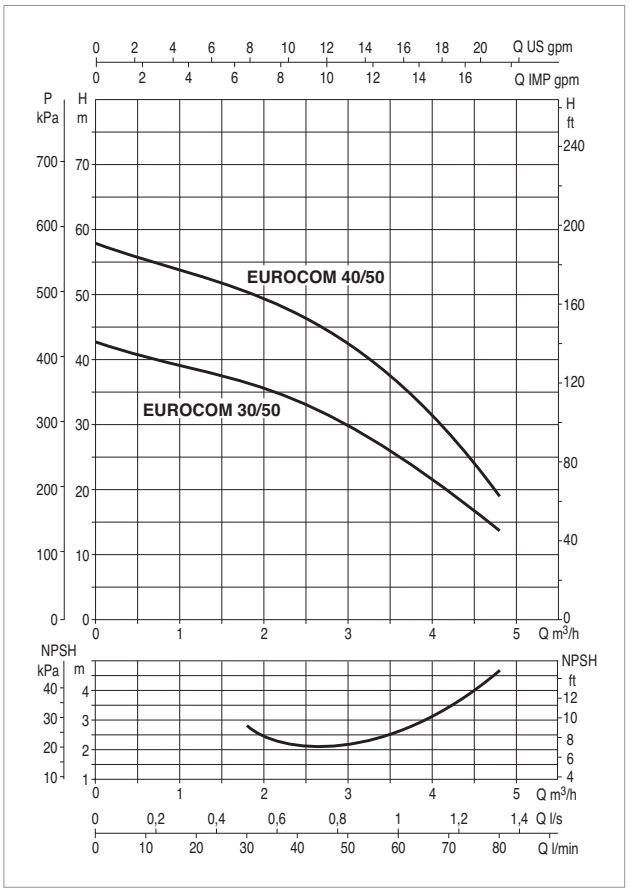

The performance curves are based on the kinematic viscosity values = 1 mm²/s and density equivalent to 1000 kg/m³. Curve tolerance according to ISO 9906.

MODEL	ELECTRICAL DATA								
	N° IMPELLER	POWER SUPPLY 50 Hz	MOTOR TYPE	P1 MAX KW	P2 NOMINAL		In A	CAPACITOR	
					kW	HP		µF	Vc
EUROCOM 30/50 M	3	1x220-240 V ~	-	0,88	0,55	0,75	3,9	12,5	450
EUROCOM 40/50 M	4	1x220-240 V ~	-	1,2	0,75	1	5,3	25	450
EUROCOM 40/50 T	4	3x230-400 V ~	IE3	1,07	0,75	1	3,6/2,1	-	-
EUROCOM 40/50 T	4	3x230-400 V ~	IE2	1,18	0,75	1	3,8/2,2	-	-

MODEL	A	B	C	E	F	G	I Ø	H	H1	H2	DNA GAS	DNM GAS	PACKING DIMENSIONS			VOLUME (mc)	GROSS WEIGHT Kg
													L/A	L/B	H		
EUROCOM 30/50 M	406	170	122	208	14	111	9	198	144	-	1 "	1 "	470	240	240	0,027	8,8
EUROCOM 40/50 M	406	170	122	208	14	111	9	203	144	-	1 "	1 "	470	240	240	0,027	11
EUROCOM 40/50 T	422	170	122	208	14	111	9	203	144	-	1 "	1 "	470	240	240	0,027	11

EUROCOM 80 - SELF-PRIMING MULTISTAGE CENTRIFUGAL

Liquid temperature range pumped: from 0 °C to +35 °C - **Maximum ambient temperature:** +40°C

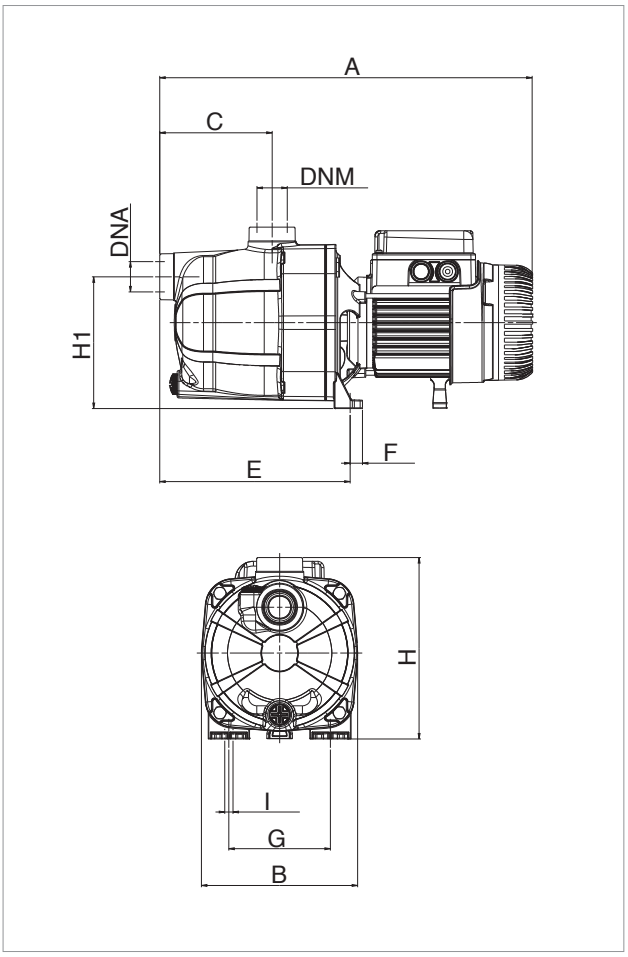

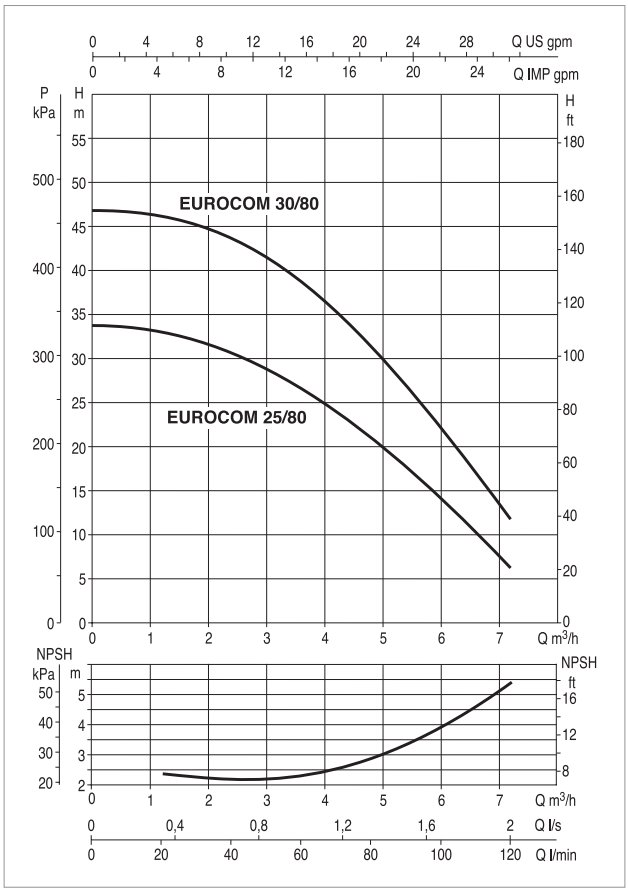

The performance curves are based on the kinematic viscosity values = 1 mm²/s and density equivalent to 1000 kg/m³. Curve tolerance according to ISO 9906.

MODEL	ELECTRICAL DATA								
	N° IMPELLER	POWER SUPPLY 50 Hz	MOTOR TYPE	P1 MAX KW	P2 NOMINAL		In A	CAPACITOR	
					kW	HP		µF	Vc
EUROCOM 30/80 T	4	3x230-400 V ~	IE3	1,06	0,8	1,1	3,6/2,1	-	-
EUROCOM 30/80 T	4	3x230-400 V ~	IE2	1,18	0,8	1,1	3,8/2,2	-	-

MODEL	A	B	C	E	F	G	I Ø	H	H1	H2	DNA GAS	DNM GAS	PACKING DIMENSIONS			VOLUME (mc)	GROSS WEIGHT Kg
													L/A	L/B	H		
EUROCOM 30/80 T	425	170	122	208	14	111	9	203	144	-	1 "	1 "	470	240	240	0,027	11

MULTI INOX

SELF-PRIMING MULTISTAGE

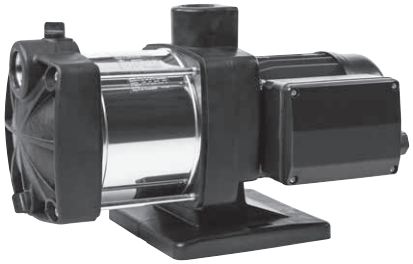

TECHNICAL DATA

Operating range:
capacity up to 90 l/min; head up to 59 m
Liquid temperature range:
for domestic use: from +35°C to +35°C
for other use: from 0°C to +40°C
Liquid quality requirements: clean, free from solid or abrasive contaminants, non-viscous, non-aggressive, uncrystallised and chemically neutral
Maximum suction depth: 8 metres
Maximum ambient temperature: +40°C
Protection rating: IPX4
Insulation class: F
Installation: fixed or portable in a horizontal position
Special executions on request: alternative voltages and/or frequencies

APPLICATIONS

Multi-stage, self priming centrifugal pump with horizontal shaft, with excellent suction capacity even in the presence of air bubbles, featuring extremely quiet operation suitable for domestic water supply and pressurisation, irrigation of gardens and general water movement.

FEATURES

Pump sleeve in stainless steel. Pressure and suction body and motor support in technopolymer. Impeller in AISI 304 stainless steel, diffuser bodies and diffuser in technopolymer. Carbon/ceramic mechanical seal. Rotor shaft in AISI 304 stainless steel. Single phase, asynchronous, continuous service motor. Incorporated thermo-amperometric protection and permanently inserted capacitor.

MATERIALS

N°	PARTS*	MATERIALS
1	SUCTION FLANGE	TECHNOPOLYMER
2	INSERT	NICKLED BRASS
3	NUT	A2 – UNI7474 STAINLESS STEEL
4	WASHER	A2 STAINLESS STEEL
5	OR GASKET	NBR
6	COUNTERFLANGE	TECHNOPOLYMER
7	OR GASKET	NBR
8	DIFFUSER	TECHNOPOLYMER
9	IMPELLER	TECHNOPOLYMER
10	ROTOR SHAFT	AISI 416 STAINLESS STEEL UNI EN 10088-1 X12CrS13
11	WASHER	A2 STAINLESS STEEL
12	SEEGER RING	AISI 316 STAINLESS STEEL
13	MECHANICAL SEAL	SILICON - VITON
14	COUNTERFACE	STEA/NBR
15	BODY	TECHNOPOLYMER
16	INSERT	NICKLED BRASS

* In contact with liquid

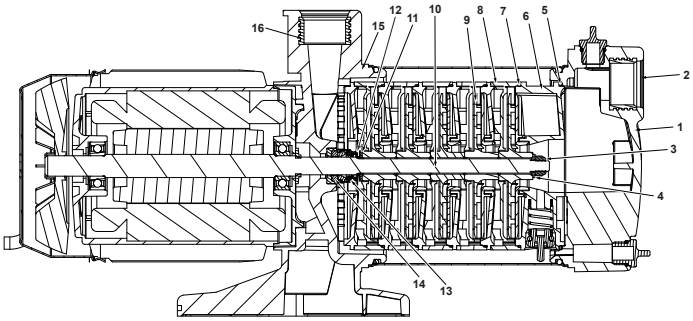

PERFORMANCE RANGE

The performance curves are based on kinematic viscosity values = 1 mm²/s and density equivalent to 1000 kg/m³. Curve tolerance according to ISO 9906.

GRAPHIC SELECTION TABLE

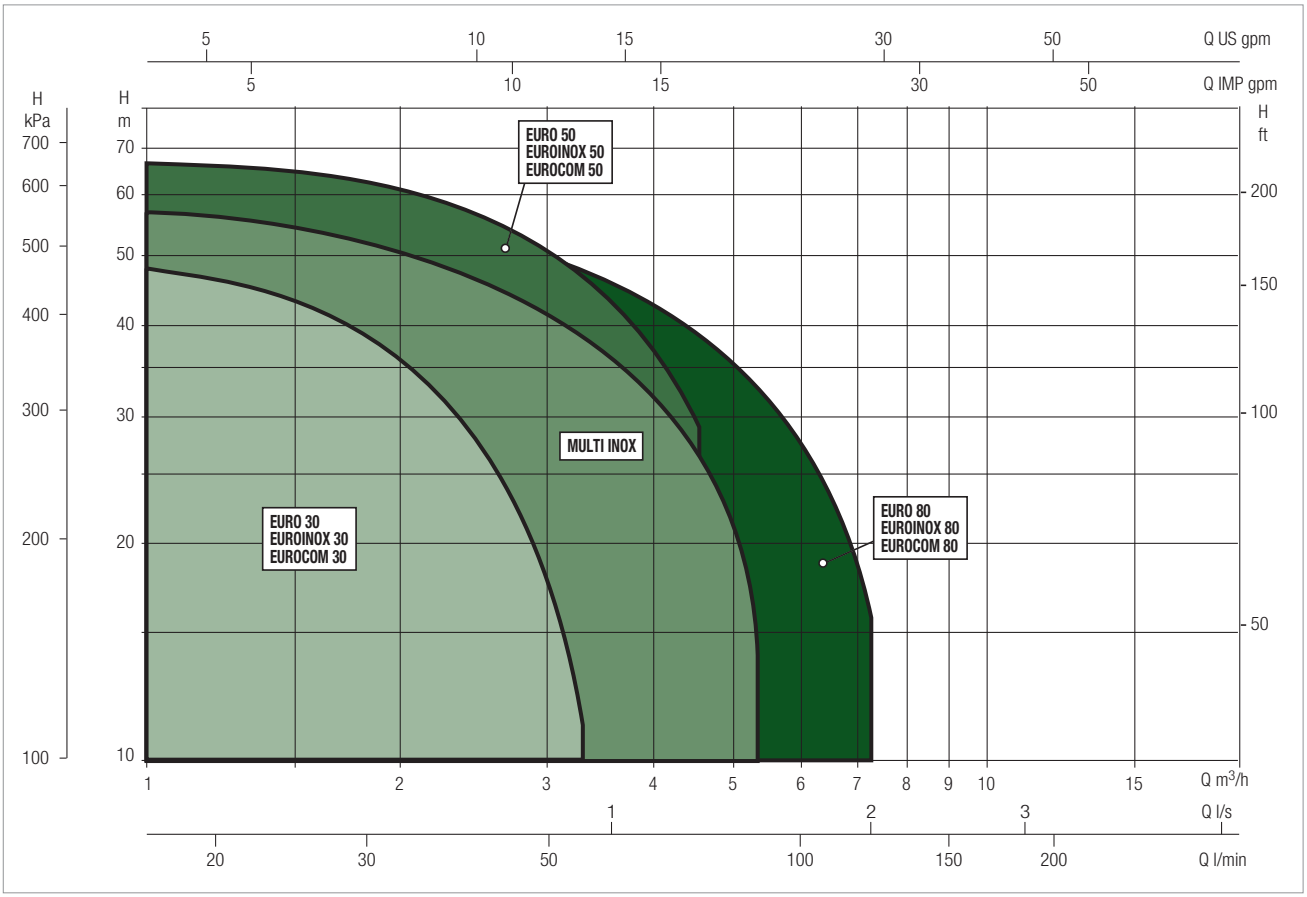

MULTI INOX SELECTION TABLE

MODEL	Q=m³/h	0	0,6	1,2	1,8	2,4	3,0	3,6	4,2	4,8	5,4
	Q=l/min	0	10	20	30	40	50	60	70	80	90
MULTI INOX 3 M	H (m)	33	32	30	29	27	22	19	14	10	5
MULTI INOX 4 M		46	45	43	40	38	33	28	22	16	9
MULTI INOX 5 M		59	58	56	53	49	45	38	32	25	13

DAB PUMPS reserve the right to make modifications without prior notice

MULTI INOX - SELF-PRIMING MULTISTAGE

Liquid temperature range pumped: from 0 °C to +35 °C - **Maximum ambient temperature:** +40°C

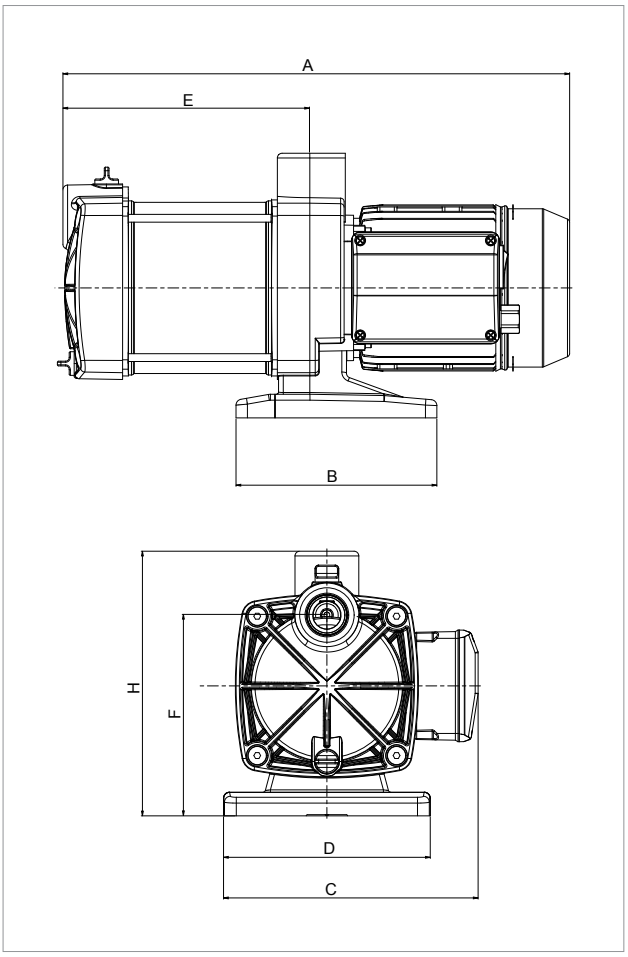

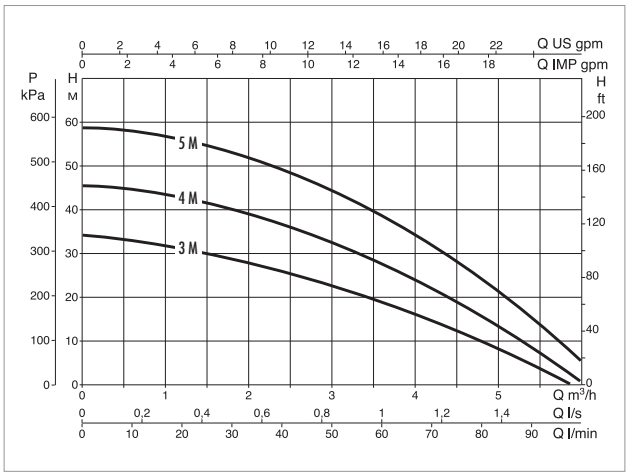

The performance curves are based on the kinematic viscosity values = 1 mm²/s and density equivalent to 1000 kg/m³. Curve tolerance according to ISO 9906.

MODEL	ELECTRICAL DATA							
	N° IMPELLER	POWER SUPPLY 50 Hz	P1 MAX KW	P2 NOMINAL		In A	CAPACITOR	
				kW	HP		µF	Vc
MULTI INOX 3 M	3	1x220-240 V ~	0,8	0,55	0,75	3,7	12,5	450
MULTI INOX 4 M	4	1x220-240 V ~	1	0,75	1	4,5	16	450
MULTI INOX 5 M	5	1x220-240 V ~	1,25	1	1,36	5,5	20	450

MODEL	A	B	C	D	E	F	H	DNA GAS	DNM GAS	PACKING DIMENSIONS			WEIGHT Kg
										L/A	L/B	H	
MULTI INOX 3 M	380	170	215	175	184	170	220	1 "	1 "	460	230	270	8,8
MULTI INOX 4 M	430	170	215	175	209	170	220	1 "	1 "	460	230	270	11,3
MULTI INOX 5 M	455	170	215	175	234	170	220	1 "	1 "	460	230	270	12,5

JET - JETINOX - EUROINOX M-P

PREPARED CENTRIFUGAL PUMPS

EUROINOX M-P

JET 151-251 T-P

TECHNICAL DATA

Operating range:
from 0.4 to 10.5 m^3/h with head up to 62 metres
Liquid quality requirements: clean, free from solid or abrasive contaminants, non-viscous, non-aggressive, uncrystallised and chemically neutral, close to the properties of water
Liquid temperature range: from 0°C to +35°C for domestic use (EN 60335-2-41). For other use: from 0°C to +40°C
Maximum ambient temperature: +40°C
Maximum operating pressure: 8 bar (800 kPa)
Installation: fixed in a horizontal position
Special executions on request: different frequencies and/or voltage
Motor protection rating: IP 44
Terminal block protection rating: IP 55
Insulation class: F
Standard input voltage: single phase 220/240 V / 50 Hz
three phase 230/400 V - 50 Hz

APPLICATIONS

Self priming centrifugal pump with excellent suction capacity even in the presence of air bubbles.
Suitable for pumping water with low levels of sandy impurities. Especially used in domestic water supply installations. Suitable for small farms and gardening, small scale industrial services and where self priming is necessary.

CONSTRUCTIONAL FEATURES OF THE PUMP

Pump body in cast iron for jet pumps and in stainless steel for the jetinox and euroinox pumps
Motor support in die cast aluminium.
Impeller, diffuser, venturi tube and sand guard in technopolymer
Stainless steel wear ring.
Carbon/ceramic mechanical seal.
SINGLE PHASE VERSION: electric pump set up with pressure gauge, pressure switch, power cord with plug and three-way brass fitting for use when connecting to a tank
THREE-PHASE VERSION: electric pumpa set up with pressure gauge, pressure switch, remote overload protection and three-way brass fitting for use when connecting to a tank

CONSTRUCTIONAL FEATURES OF THE MOTOR

Asynchronous type, closed, with external air cooling. Rotor mounted on oversized greased-for-life ball bearings, to guarantee low noise and long life. Incorporated thermo-amperometric protection and permanently inserted capacitor in the single phase version. It is recommended to use overload protection for three phase motor protection, in compliance with current legislation. Manufactured pursuant to CEI 2-3 and CEI 61-69 (EN 60335-2-41).

MATERIALS

N°	PARTS *	MATERIALS
1	PUMP BODY	200 UNI ISO 185 CAST IRON (FOR JET)
		AISI 304 STAINLESS STEEL (FOR JETINOX AND EUROINOX)
3	FRAME	DIE CAST ALUMINIUM
4	IMPELLER	TECHNOPOLYMER A
7	SHAFT WITH ROTOR	AISI 416 STAINLESS STEEL X12 CrS13 - UNI 6900/71
16	MECHANICAL SEAL	CARBON/CERAMIC
28	OR GASKET	NBR RUBBER
160	VENTURI DIFFUSER NOZZEL GROUP	TECHNOPOLYMER A

* In contact with liquid

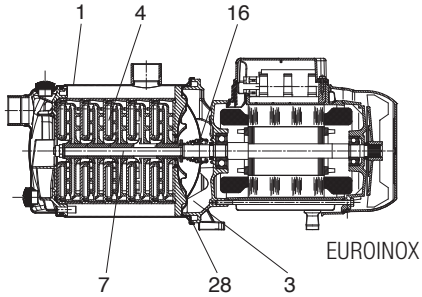

EUROINOX

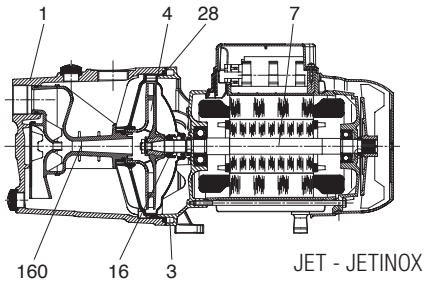

JET - JETINOX

JET - JETINOX - EUROINOX M-P

CENTRIFUGAL PUMPS FITTED

SELECTION TABLE - JET - JETINOX - EUROINOX M-P

MODEL	Q=m³/h	0	0,6	1,2	1,8	2,4	3	3,6	4,2	4,8	6	7,2	9	9,6	10,5
	Q=l/min	0	10	20	30	40	50	60	70	80	100	120	150	160	175
JET 82 M-P	H (m)	47	40	34	30	26,2	23,5	20,3							
JET 102 M-P		53,8	47	41	36,3	32,4	28,8	25,8							
JET 132 M-P		48,3	45,6	42,8	40	37,6	35	32,5	30	27,2					
JETINOX 82 M-P		47	40	34	30	26,2	23,5	20,3							
JETINOX 102 M-P		53,8	47	41	36,3	32,4	28,8	25,8							
JETINOX 132 M-P		48,3	45,6	42,8	40	37,6	35	32,5	30	27,2					
JET 200 M-P		41			37,5	36,5	35,2	34	33	31,8	29,5	27,2	24	22,8	21,3
JET 200 T-P		41			37,5	36,5	35,2	34	33	31,8	29,5	27,2	24	22,8	21,3
JET 300 M-P		51			48	47	46	44,5	43	42	40	37	33	32	29
JET 300 T-P		51			48	47	46	44,5	43	42	40	37	33	32	29
JET 151 M-P		61	58,2	56	53	50	46	43	36						
JET 151 T-P		61	58,2	56	53	50	46	43	36						
JET 251 M-P		62	60	58	56	54	51	48,5	46	43,5	39	34,2			
JET 251 T-P		62	60	58	56	54	51	48,5	46	43,5	39	34,2			
EUROINOX 40/30 M-P		57	52,7	47	38,8	29	17,7								
EUROINOX 30/50 M-P		42	40,2	38,2	36,2	33,8	30	24,8	19,5	14					
EUROINOX 40/50 M-P		58	55,3	52,8	50,1	47,1	42,7	35,8	28	19					
EUROINOX 30/80 M-P		47		46,5	45	43,5	41	38	34,5	31	23	12			
EUROINOX 40/80 M-P		59		57	56	54	51	47	43,5	39	29,5	16,5			

JET 82-102-132-MP - CENTRIFUGAL PUMPS FITTED

Liquid temperature range pumped: from 0°C to +35°C - Maximum ambiant temperature: +40°C

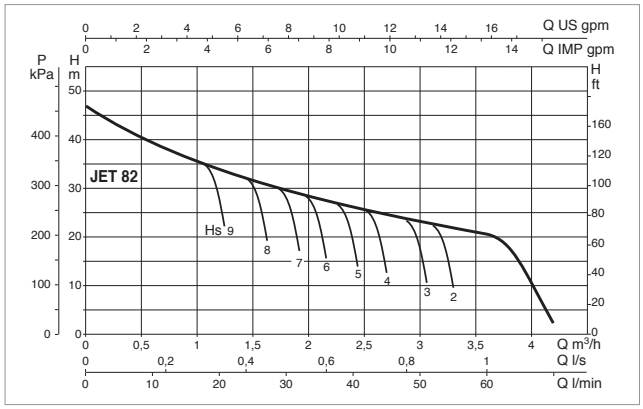

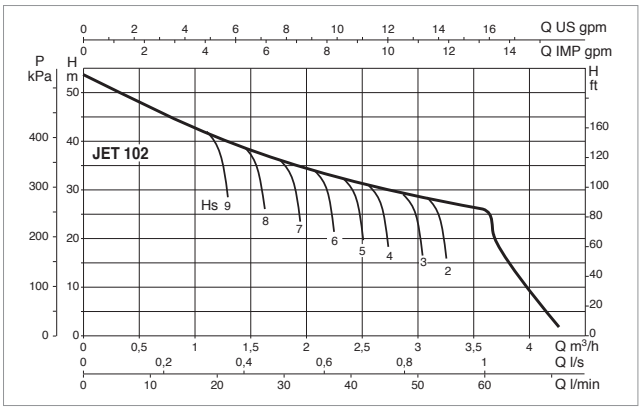

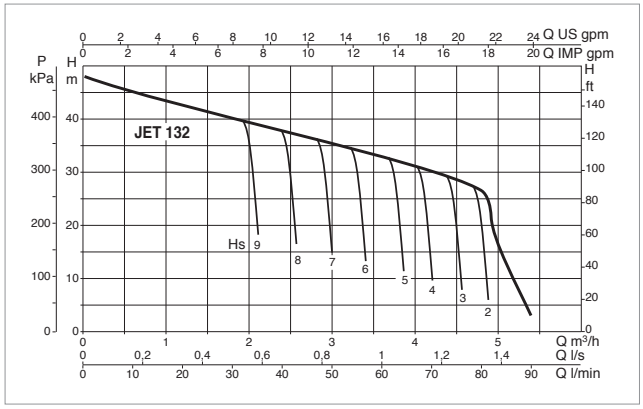

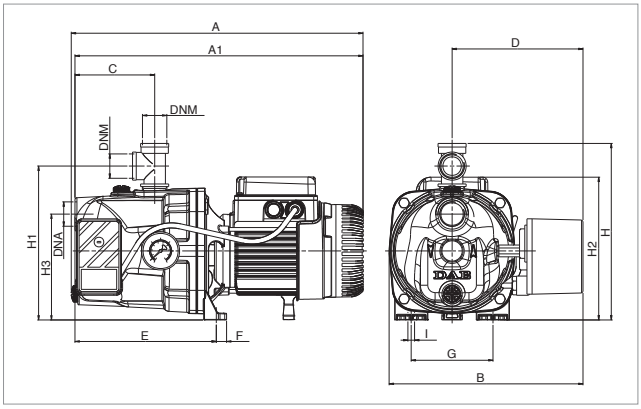

The performance curves on kinematic viscosity values = 1 mm^2/s and equivalent to 1000 kg/m^3. Curve tolerance according to ISO9906.

MODEL	ELECTRICAL DATA						
	POWER SUPPLY 50 Hz	P1 MAX KW	P2 NOMINAL		In A	CAPACITOR	
			kW	HP		µF	Vc
JET 82 M-P	1x220-400 V ~	0,85	0,6	0,8	3,8	12,5	450
JET 102 M-P	1x220-400 V ~	1,13	0,75	1	5,1	16	450
JET 132 M-P	1x220-400 V ~	1,49	1	1,36	6,6	25	450

MODEL	A	A1	B	C	D	E	F	G	I Ø	H	H1	H2	H3	I Ø	DNA GAS	DNM GAS	PACKING DIMENSIONS			VOLUME (mc)	GROSS WEIGHT Kg
																	L/A	L/B	H		
JET 82 M-P	395	390	263	108	177	192	14	111	–	239	209	193	144	9	1"	1"	440	295	235	0,031	12,1
JET 102 M-P	414	390	263	108	177	192	14	111	–	239	209	203	144	9	1"	1"	440	295	235	0,031	13,9
JET 132 M-P	414	390	263	108	177	192	14	111	–	239	209	203	144	9	1"	1"	440	295	235	0,031	14,9

JET 200-300-151-251-MP - CENTRIFUGAL PUMPS FITTED

Liquid temperature range pumped: from 0 °C to +35 °C - **Maximum ambient temperature:** +40°C

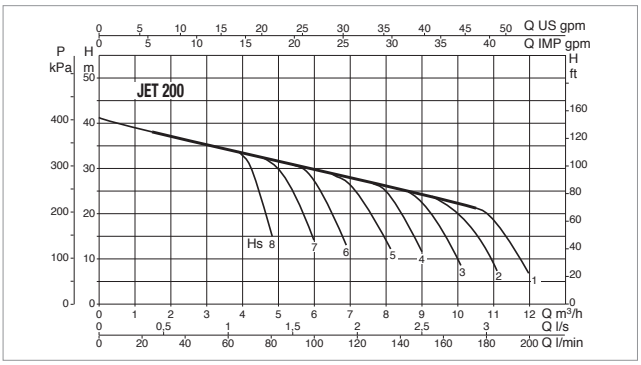

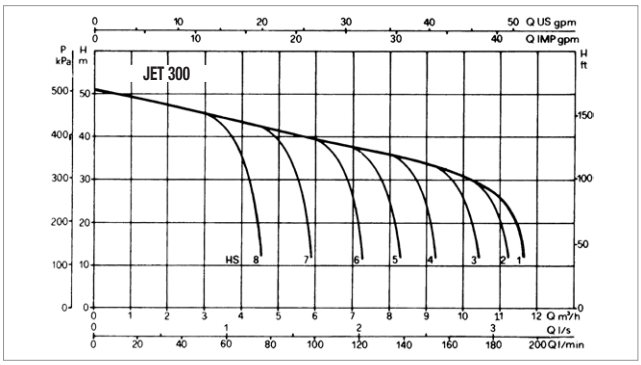

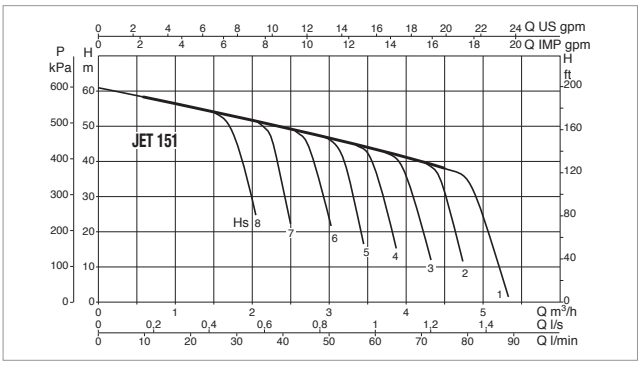

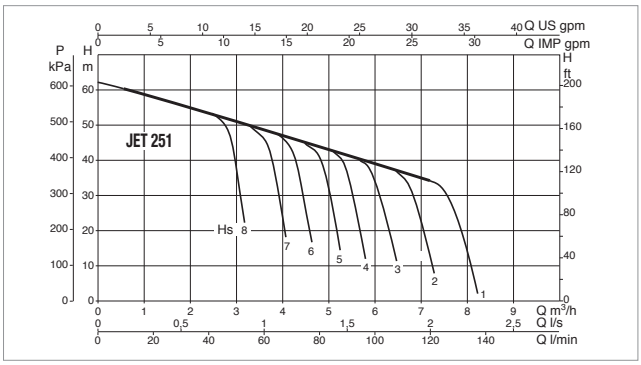

The performance curves are based on kinematic viscosity values = 1 mm²/s and density equivalent to 1000 kg/m³. Curve tolerance according to ISO 9906.

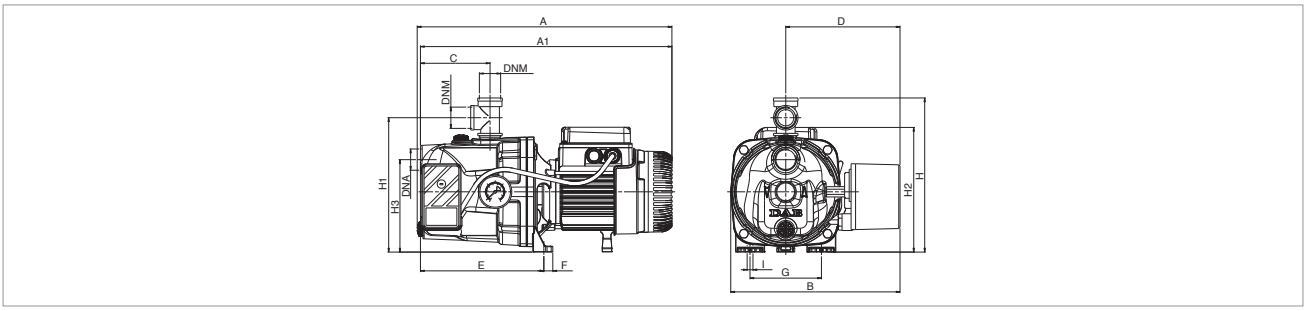

MODEL	ELECTRICAL DATA							
	POWER SUPPLY 50 Hz	MOTOR TYPE	P1 MAX KW	P2 NOMINAL		In A	CAPACITOR	
				kW	HP		µF	Vc
JET 200 M-P	1x220-240 V ~	–	2	1,5	2	9	31,5	450
JET 200 T-P	3x400 V~	IE3	2,1	1,5	2	6,4-3,7	–	–
JET 200 T-P	3x400 V~	IE2	2	1,5	2	6,8-3,9	–	–
JET 300 M-P	1x220-240 V ~	–	2,7	2,2	3	12	40	450
JET 300 T-P	3x400 V~	IE3	2,5	2,2	3	7,4-4,3	–	–
JET 300 T-P	3x400 V~	IE2	2,5	2,2	3	8,5-4,9	–	–
JET 151 M-P	1x220-240 V ~	–	1,6	1,1	1,5	7,2	31,5	450
JET 151 T-P	3x400 V~	IE3	1,56	1,1	1,5	5,5-3,2	–	–
JET 151 T-P	3x400 V~	IE2	1,6	1,1	1,5	5,2-3	–	–
JET 251 M-P	1x220-240 V ~	–	2,2	1,85	2,5	10	40	450
JET 251 T-P	3x400 V~	IE3	2,1	1,85	2,5	6,4-3,7	–	–
JET 251 T-P	3x400 V~	IE2	2,2	1,85	2,5	6,9-4	–	–

MODEL	A	B	C	E	F	G	H	H1	H2	I Ø	DNA GAS	DNM GAS	PACKING DIMENSIONS			VOLUME (mc)	GROSS WEIGHT Kg
													L/A	L/B	H		
JET 200 M-P	521	294	151	282	20	160	275	175	–	11	1 ½"	1 ¼"	600	236	267	0,038	27,5
JET 200 T-P	521	294	151	282	20	160	275	175	–	11	1 ½"	1 ¼"	600	236	267	0,038	28
JET 300 M-P	595	294	151	282	20	160	275	175	–	11	1 ½"	1 ¼"	660	236	267	0,042	31,5
JET 300 T-P	521	294	151	282	20	160	275	175	–	11	1 ½"	1 ¼"	600	236	267	0,038	31
JET 151 M-P	558	290	220	367	15	145	305	165	–	11	1 ¼"	1"	600	236	267	0,038	31,5
JET 151 T-P	558	290	220	367	15	145	305	165	–	11	1 ¼"	1"	600	236	267	0,038	33
JET 251 M-P	632	290	220	367	15	145	305	165	–	11	1 ¼"	1"	645	236	267	0,041	36
JET 251 T-P	558	290	220	367	15	145	305	165	–	11	1 ¼"	1"	600	236	267	0,038	34

EUROINOX 30-50-80-MP - CENTRIFUGAL PUMPS FITTED

Liquid temperature range pumped: from 0 °C to +35 °C - Maximum ambient temperature: +40°C

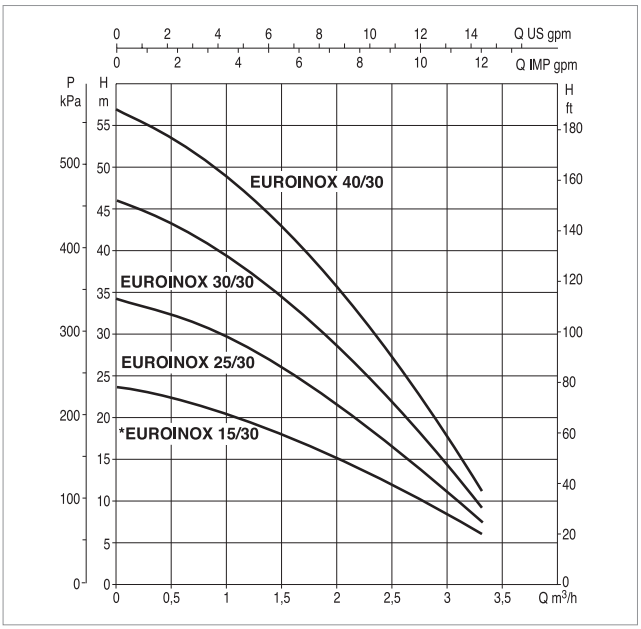

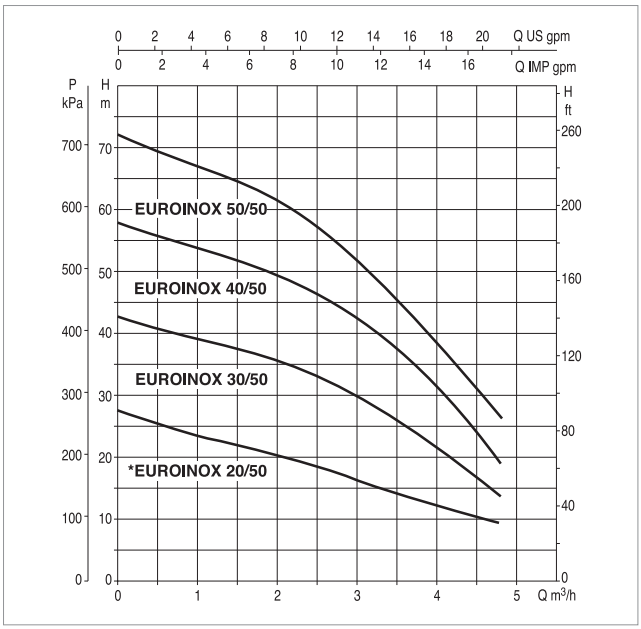

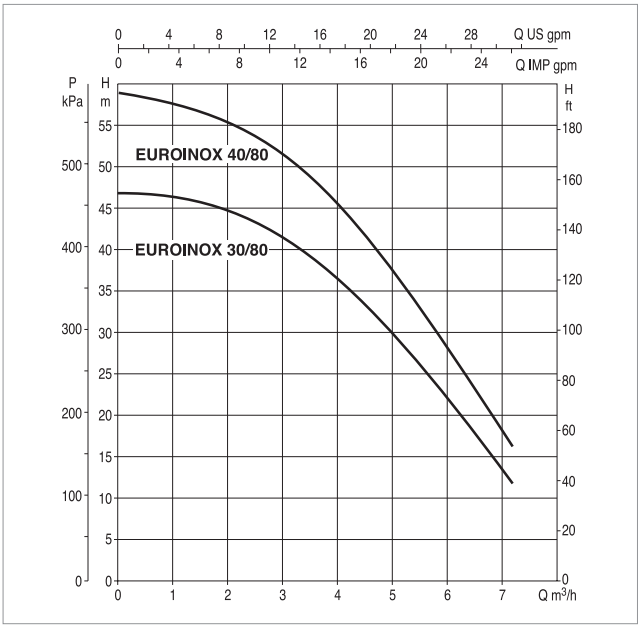

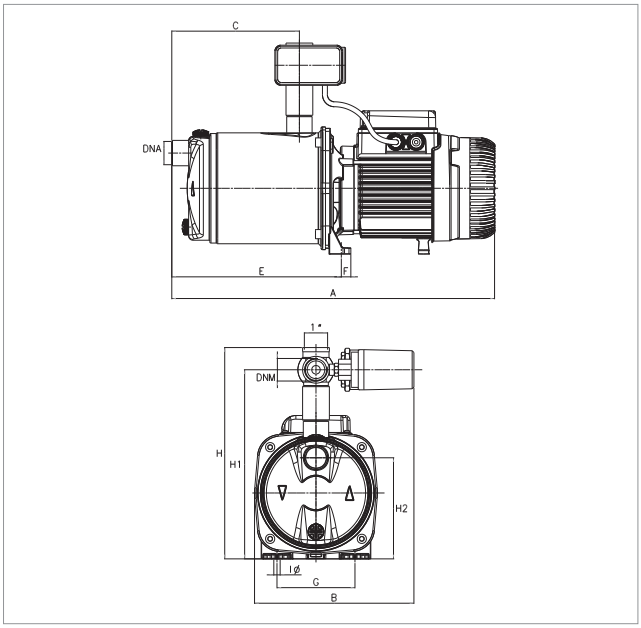

The performance curves are based on kinematic viscosity values = 1 mm²/s and density equivalent to 1000 kg/m³. Curve tolerance according to ISO 9906.

MODEL	ELECTRICAL DATA						
	POWER SUPPLY 50 Hz	P1 MAX KW	P2 NOMINAL		In A	CAPACITOR	
			kW	HP		µF	Vc
EUROINOX 40/30 M-P	1x220-240V~	0,88	0,55	0,75	3,9	12,5	450
EUROINOX 30/50 M-P	1x220-240V~	0,88	0,55	0,75	3,9	12,5	450
EUROINOX 40/50 M-P	1x220-240V~	1,2	0,8	1,1	5,3	25	450
EUROINOX 30/80 M-P	1x220-240V~	1,2	0,75	1	5,2	25	450
EUROINOX 40/80 M-P	1x220-240V~	1,48	1	1,36	6,3	25	450

MODEL	A	B	C	E	F	G	H	H1	H2	I Ø	DNA GAS	DNM GAS	PACKING DIMENSIONS			VOLUME (mc)	GROSS WEIGHT Kg
													L/A	L/B	H		
EUROINOX 40/30 M-P	439	226	108	241	13,5	111	300	268	143	9	1"	1"	-	-	-	-	15,5
EUROINOX 30/50 M-P	384	226	108	186	13,5	111	300	268	143	9	1"	1"	-	-	-	-	11,4
EUROINOX 40/50 M-P	458	226	108	241	13,5	111	300	268	143	9	1"	1"	-	-	-	-	14,5
EUROINOX 30/80 M-P	458	226	108	241	13,5	111	300	268	143	9	1"	1"	-	-	-	-	14,5
EUROINOX 40/80 M-P	458	226	108	241	13,5	111	300	268	143	9	1"	1"	-	-	-	-	17,5

JETINOX 82-102 -112 -132-MP - CENTRIFUGAL PUMPS FITTED

Liquid temperature range pumped: from 0 °C to +35 °C - Maximum ambient temperature: +40°C

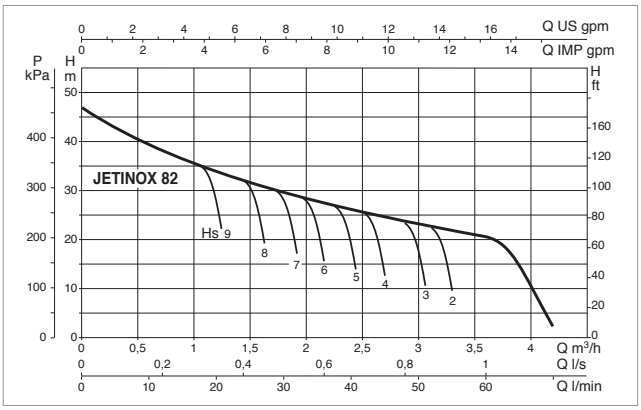

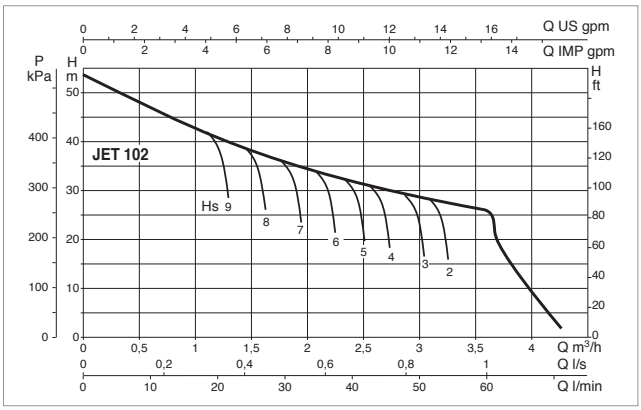

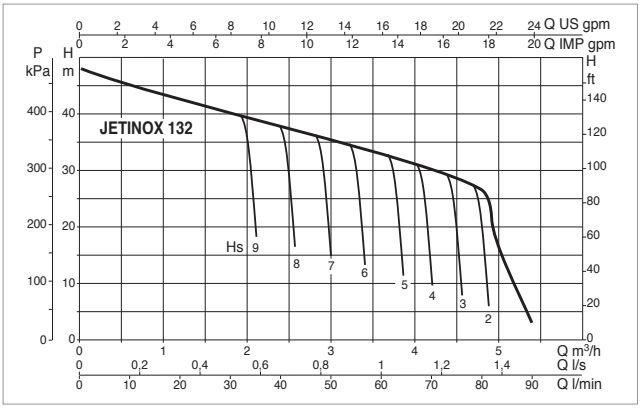

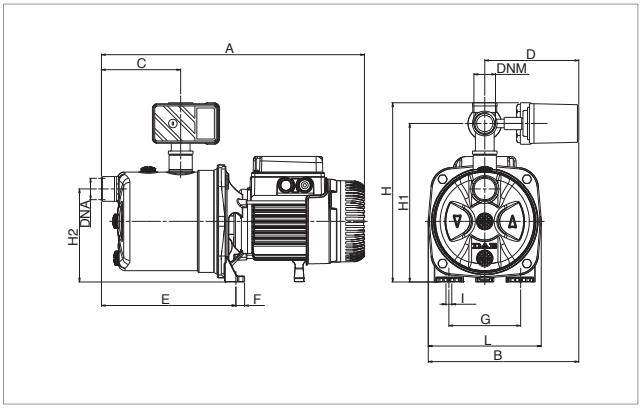

The performance curves are based on kinematic viscosity values = 1 mm²/s and density equivalent to 1000 kg/m³. Curve tolerance according to ISO 9906.

MODEL	ELECTRICAL DATA						
	POWER SUPPLY 50 Hz	P1 MAX KW	P2 NOMINAL		In A	CAPACITOR	
			kW	HP		µF	Vc
JETINOX 82 MP	1x220-240 V ~	0,85	0,6	0,8	3,8	12,5	450
JETINOX 102 MP	1x220-240 V ~	1,13	0,75	1	5,1	16	450
JETINOX 132 MP	1x220-240 V ~	1,49	1	1,36	6,6	25	450

MODEL	A	B	C	D	E	F	G	H	H1	H2	I	L	DNA GAS	DNM GAS	PACKING DIMENSIONS			VOLUME (mc)	GROSS WEIGHT Kg
															L/A	L/B	H		
JETINOX 82 MP	406	232	122	145	207	14	111	276	244	144	9	174	1"	1"	450	276	320	0,031	13,6
JETINOX 102 MP	424	232	122	145	207	14	111	276	244	144	9	174	1"	1"	450	276	320	0,031	14,8
JETINOX 132 MP	424	232	122	145	207	14	111	276	244	144	9	174	1"	1"	450	276	320	0,031	15,8

AQUAJET

AUTOMATIC SELF-PRIMING PRESSURISATION GROUPS

TECHNICAL DATA

Operating range:
up to 5.4 m^3/h with head up to 61 metres
Liquid quality requirements: clean, free from solid or abrasive contaminants, non-viscous, non-aggressive, uncrystallised and chemically neutral, close to the properties of water
Liquid temperature range: from 0°C to +35°C for domestic use (EN 60335-2-41). For other use: from 0°C to +40°C
Maximum ambient temperature: +40°C
Maximum operating pressure: 8 bar (800 kPa)
Motor protection rating: IP 44
Terminal block protection rating: IP 55
Insulation class: F
Standard input voltage: single phase 220-240 V / 50 Hz

APPLICATIONS

Automatic booster sets, especially suitable for domestic use, small civil, farming or industrial installations, washing plants and leisure activities.
These feature JET self-priming electric pumps, which work even in the presence of air bubbles and small sandy impurities in the water.
The assembly comprises a 20 litre capacity mebrane tank, pressure switch for automatic operation, pressure gauge, JET electric pump with power cord with plug, fittings kit between the pump and the tank, all fully assembled and ready for installation.

CONSTRUCTIONAL FEATURES OF THE PUMP

Pump body and motor support in die cast aluminium.
Impeller, diffuser, venturi tube and sand guard in technopolymer
Stainless steel wear ring.
Carbon/ceramic mechanical seal.

CONSTRUCTIONAL FEATURES OF THE MOTOR

Asynchronous type, closed, with external air cooling.
Rotor mounted on oversized greased-for-life ball bearings, to guarantee low noise and long life.
Incorporated thermo-amperometric protection and permanently inserted capacitor.
Manufactured pursuant to CEI 2-3 / CEI 61-69 (EN 60335-2-41).

CONSTRUCTIONAL FEATURES OF THE TANK

Horizontal, 20 litre capacity tank, with butyl membrane, including rear support brackets and front housing brackets for installation of the top side of the pump.

DAB PUMPS reserve the right to make modifications without prior notice

AQUAJET

AUTOMATIC SELF-PRIMING PRESSURISATION GROUPS

PERFORMANCE RANGE

The performance curves are based on kinematic viscosity values = 1 mm²/s and density equivalent to 1000 kg/m³. Curve tolerance according to ISO 9906.

GRAPHIC SELECTION TABLE

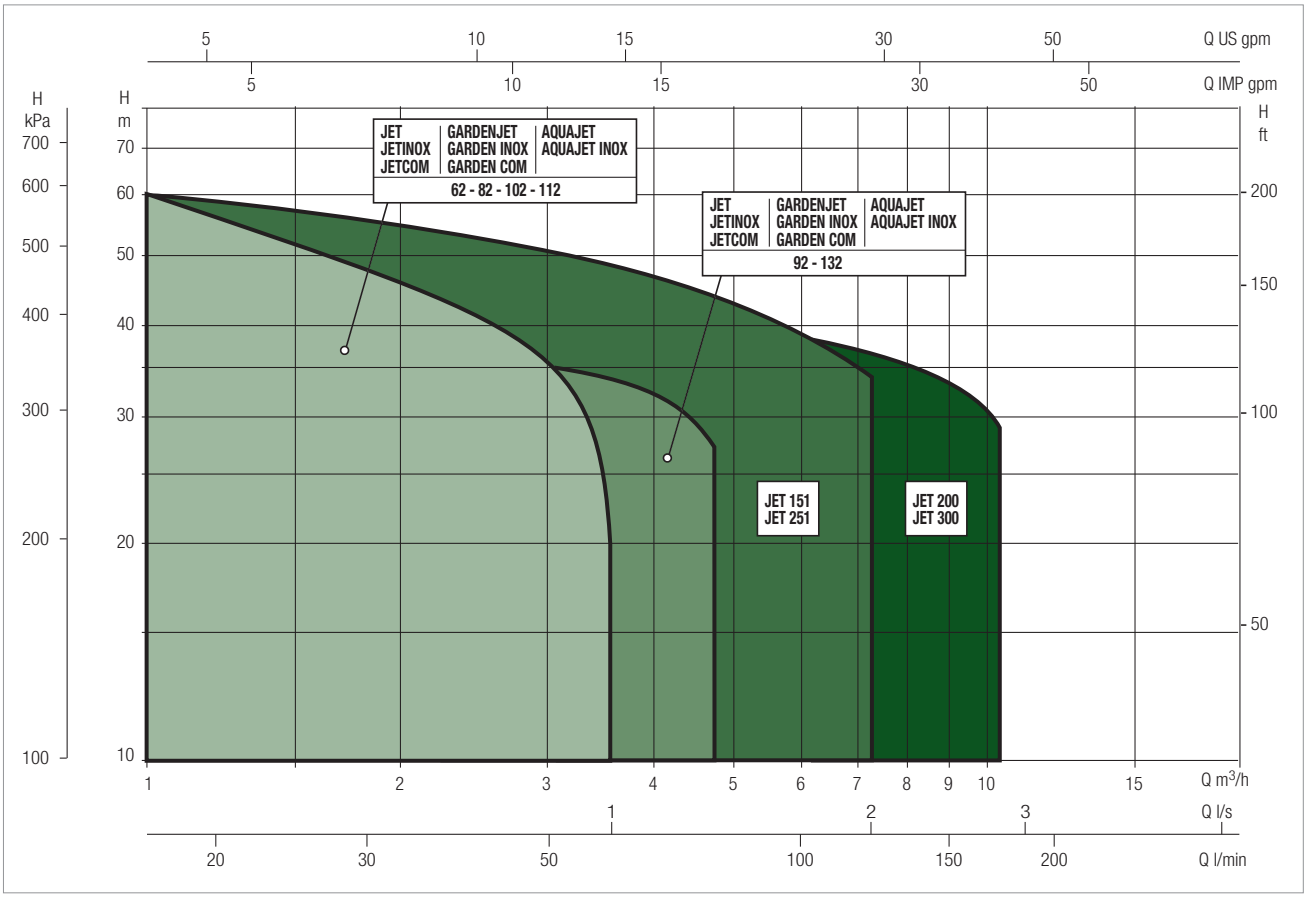

AQUAJET SELECTION TABLE

MODEL	Q=m³/h	0	0,6	1,2	1,8	2,4	3,0	3,6	4,2	4,8
	Q=l/min	0	10	20	30	40	50	60	70	80
AQUAJET 82 M - G	H (m)	47	40	34	30	26,2	23,5	20,3		
AQUAJET 102 M - G		53,8	47	41	36,3	32,4	28,8	25,8		
AQUAJET 112 M - G		61	54	47,8	42,8	38,8	34,8	22		
AQUAJET 92 M - G		36,2	33,5	31	28,4	26	24	21,8	19,6	17,5
AQUAJET 132 M - G		48,3	45,6	42,8	40	37,6	35	32,5	30	27,2

AQUAJET

AUTOMATIC SELF-PRIMING PRESSURISATION GROUPS

MATERIALS

N°	PARTS *	MATERIALS
1	PUMP BODY	200 UNI ISO 185 CAST IRON
3	FRAME	DIE CAST ALUMINIUM
4	IMPELLER	TECHNOPOLYMER A
7	SHAFT WITH ROTOR	AISI 416 STAINLESS STEEL X12 CrS13 - UNI 6900/71
16	MECHANICAL SEAL	CARBON/CERAMIC
28	OR GASKET	NBR RUBBER
160	VENTURI DIFFUSER NOZZEL GROUP	TECHNOPOLYMER A

* In contact with liquid

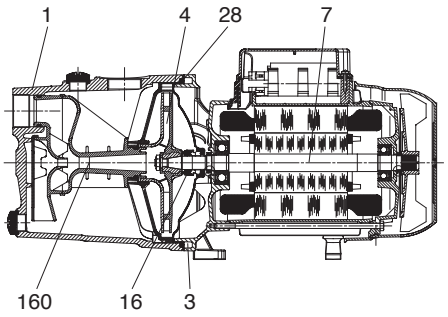

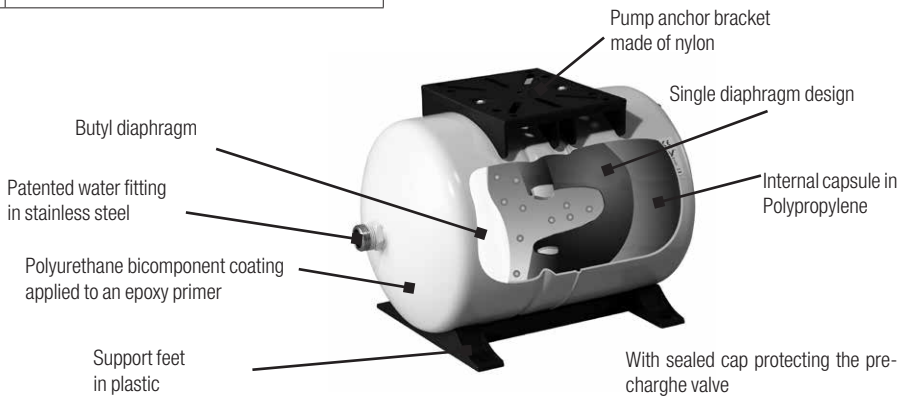

SELF PRIMING CAPACITY

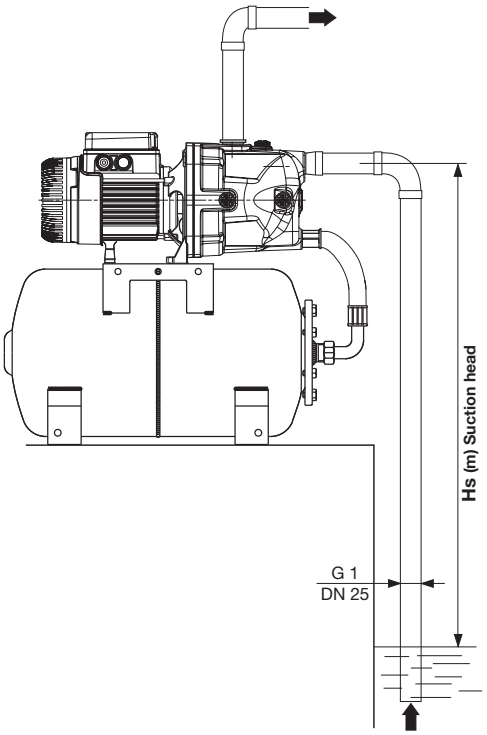

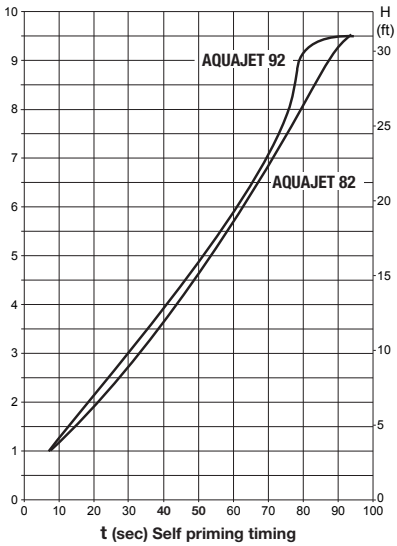

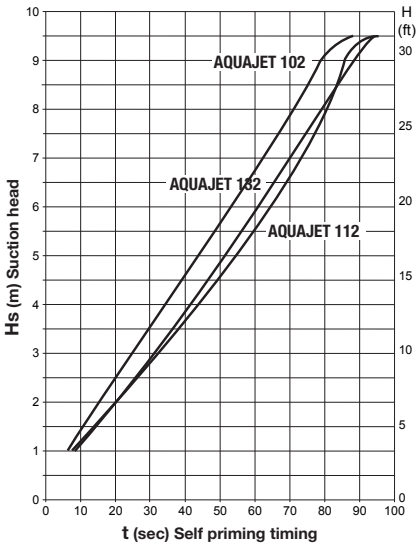

AQUAJET - AUTOMATIC SELF-PRIMING PRESSURISATION GROUPS

Liquid temperature range pumped: from 0 °C to +35 °C - **Maximum ambient temperature:** +40°C

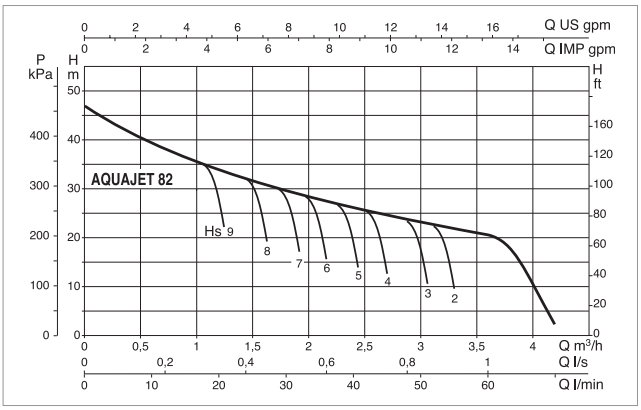

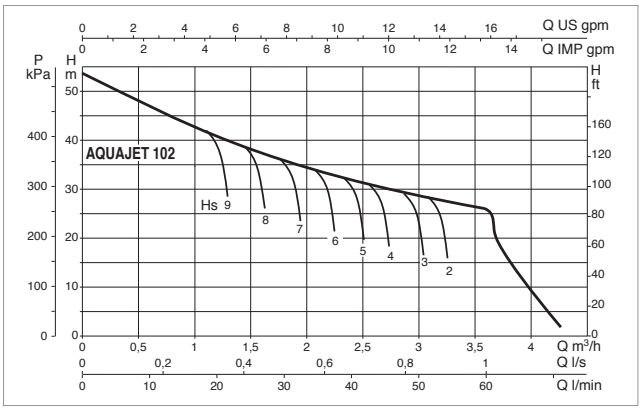

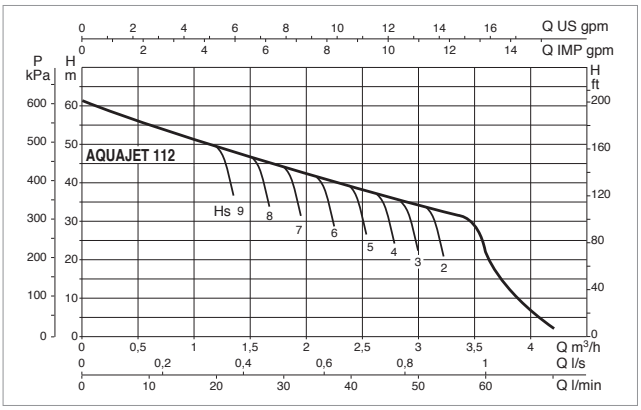

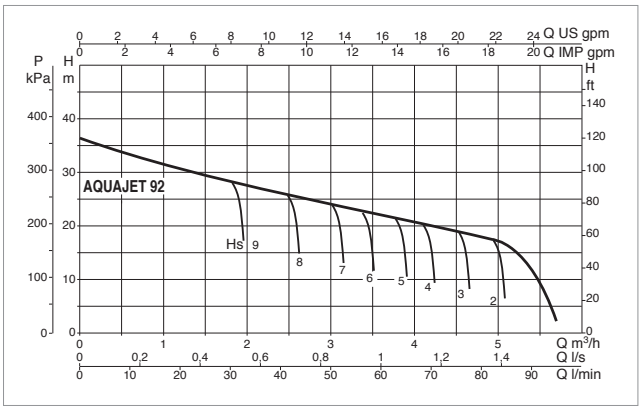

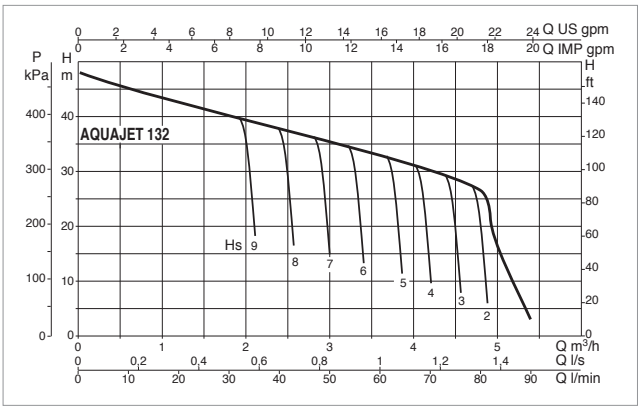

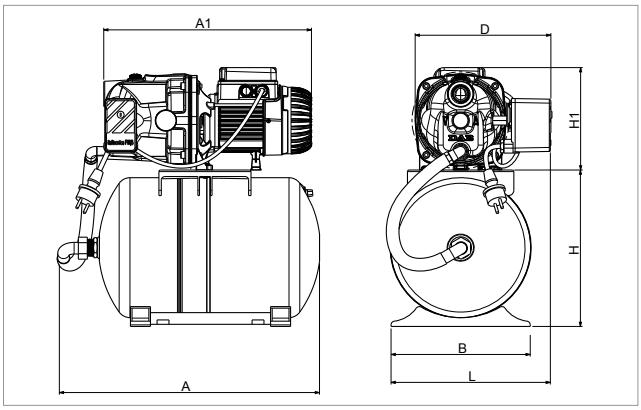

The performance curves are based on kinematic viscosity values = 1 mm²/s and density equivalent to 1000 kg/m³. Curve tolerance according to ISO 9906.

MODEL	ELECTRICAL DATA						
	POWER SUPPLY 50 Hz	P1 MAX kW	P2 NOMINAL		In A	CAPACITOR	
			kW	HP		µF	Vc
AQUAJET 82 M - G	1x220-240 V ~	0,85	0,6	0,8	3,8	12,5	450
AQUAJET 102 M - G	1x220-240 V ~	1,13	0,75	1	5,1	16	450
AQUAJET 112 M - G	1x220-240 V ~	1,4	1	1,36	6,2	25	450
AQUAJET 92 M - G	1x220-240 V ~	0,94	0,75	1	4,2	14	450
AQUAJET 132 M - G	1x220-240 V ~	1,49	1	1,36	6,6	25	450

MODEL	A	A1	B	D	H	H1	L	DNA GAS	DNM GAS	PACKING DIMENSIONS			VOLUME (mc)	GROSS WEIGHT Kg
										L/A	L/B	H		
AQUAJET 82 M - G	492	393	263	256	296	194	301	1"	1"	566	360	554	0,104	18,2
AQUAJET 102 M - G	492	413	263	256	296	204	301	1"	1"	566	360	554	0,104	20
AQUAJET 112 M - G	492	413	263	256	296	204	301	1"	1"	566	360	554	0,104	21
AQUAJET 92 M - G	492	303	263	256	296	194	301	1"	1"	566	360	554	0,104	19,2
AQUAJET 132 M - G	492	413	263	256	296	204	301	1"	1"	566	360	554	0,104	21

AQUAJETINOX

AUTOMATIC SELF-PRIMING PRESSURISATION GROUPS

TECHNICAL DATA

Operating range:
from 0.6 to 5.4 m^3/h with head up to 61 metres
Liquid quality requirements: clean, free from solid or abrasive contaminants, non-viscous, non-aggressive, uncrystallised and chemically neutral, close to the properties of water
Liquid temperature range:
from 0°C to +35°C for domestic use (EN 60335-2-41)
for other use: from 0°C to +40°C
Maximum suction depth: 8 metres.
Maximum ambient temperature: +40°C
Maximum operating pressure: 8 bar (800 kPa)
Installation: fixed or portable in a horizontal position
Special executions on request: alternative voltages and/or frequencies
Motor protection rating: IP 44
Terminal block protection rating: IP 55
Insulation class: F
Standard input voltage: single phase 220/240 V / 50 Hz

APPLICATIONS

Automatic booster sets, especially suitable for domestic use, small civil, farming or industrial installations, washing plants and leisure activities.
These feature JETINOX self-priming electric pumps, which work even in the presence of air bubbles and small sandy impurities in the water.
The assembly comprises a 20 litre capacity mebrane tank, pressure switch for automatic operation, pressure gauge, JETINOX electric pump with power cord with plug, fittings kit between the pump and the tank, all fully assembled and ready for installation.

CONSTRUCTIONAL FEATURES OF THE PUMP

Pump body, seal holder cover and wear ring in stainless steel.
Motor support in die cast aluminium.
Impeller, diffuser, venturi tube in technopolymer.
Carbon/ceramic mechanical seal.

CONSTRUCTIONAL FEATURES OF THE MOTOR

Asynchronous type, closed, with external air cooling.
Rotor mounted on oversized greased-for-life ball bearings, to guarantee low noise and long life.
Incorporated thermo-amperometric protection and permanently inserted capacitor in the single phase version.
It is recommended to use overload protection for three phase motor protection, in compliance with current legislation.
Manufacture pursuant to CEI 2-3 and CEI 61-69 (EN 60335-2-41) standard.

DAB PUMPS reserve the right to make modifications without prior notice

AQUAJETINOX

AUTOMATIC SELF-PRIMING PRESSURISATION GROUPS

PERFORMANCE RANGE

The performance curves are based on kinematic viscosity values = 1 mm²/s and density equivalent to 1000 kg/m³. Curve tolerance according to ISO 9906.

GRAPHIC SELECTION TABLE

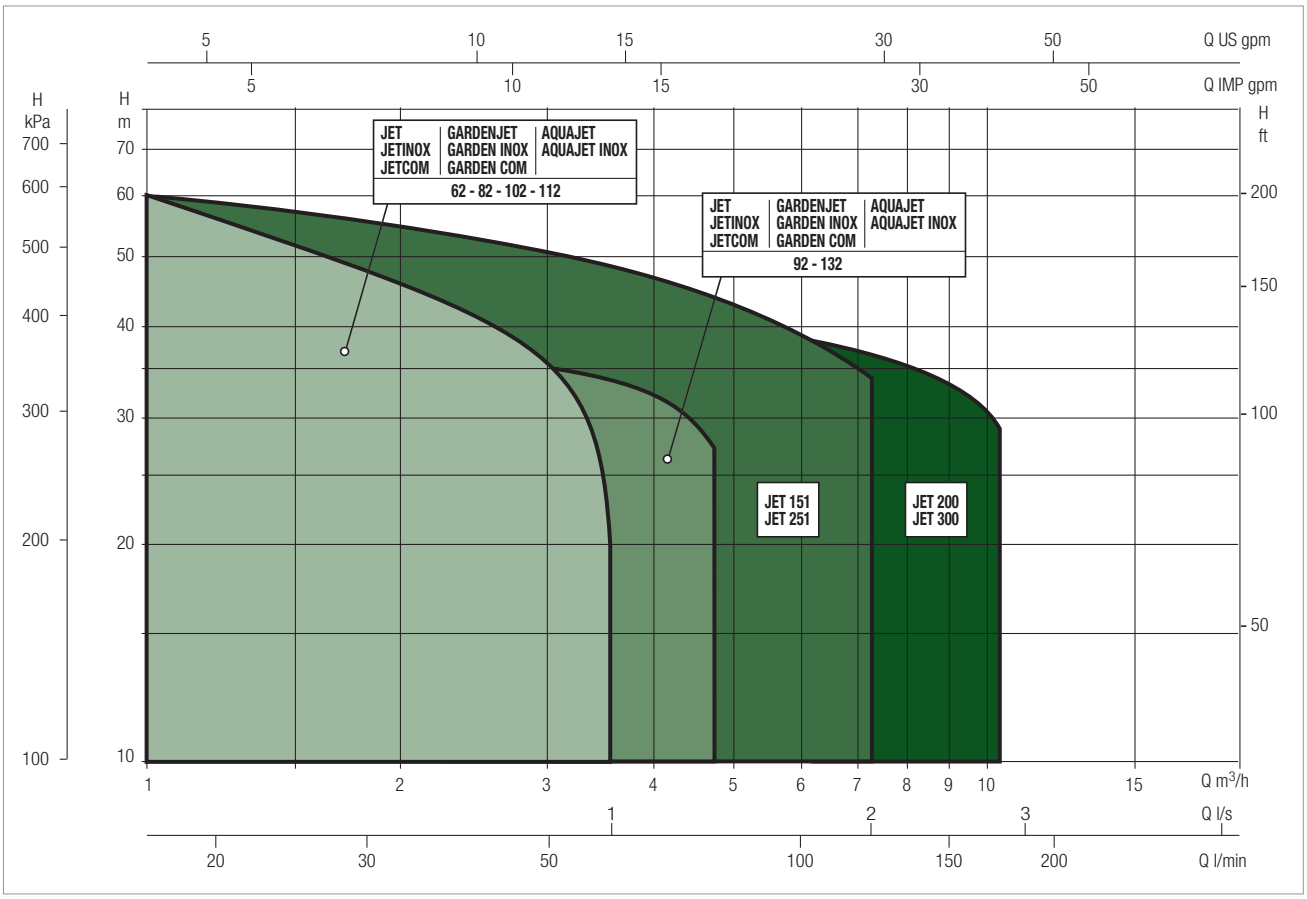

AQUAJETINOX SELECTION TABLE

MODEL	Q=m³/h	0	0,6	1,2	1,8	2,4	3,0	3,6	4,2	4,8
	Q=l/min	0	10	20	30	40	50	60	70	80
AQUAJET-INOX 82 M - G	H (m)	47	40	34	30	26,2	23,5	20,3		
AQUAJET-INOX 102 M - G		53,8	47	41	36,3	32,4	28,8	25,8		
AQUAJET-INOX 112 M - G		61	54	47,8	42,8	38,8	34,8	20		
AQUAJET-INOX 132 M - G		48,3	45,6	42,8	40	37,6	35	32,5	30	27,2

AQUAJETINOX

AUTOMATIC SELF-PRIMING PRESSURISATION GROUPS

MATERIALS

N°	PARTS*	MATERIALS
1	PUMP BODY	AISI 304 STAINLESS STEEL X5 CRNi 1810 - UNI 6900/71
4	IMPELLER	TECHNOPOLYMER A
7	SHAFT WITH ROTOR	AISI 303 STAINLESS STEEL X10 CrNiS 1809 - UNI 6900/71
16	MECHANICAL SEAL	CARBON/CERAMIC
28	OR GASKET	NBR RUBBER
36	SEAL HOLDER COVER	AISI 304 STAINLESS STEEL X5 CRNI 1810 - UNI 6900/71
160	VENTURI DIFFUSER NOZZLE GROUP	TECHNOPOLYMER A

* In contact with liquid

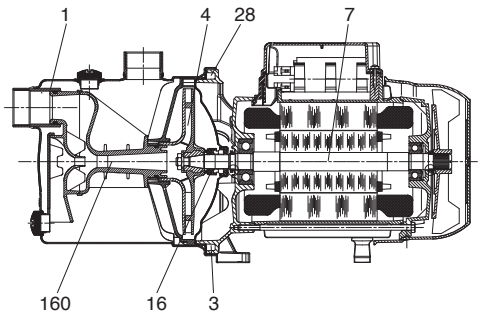

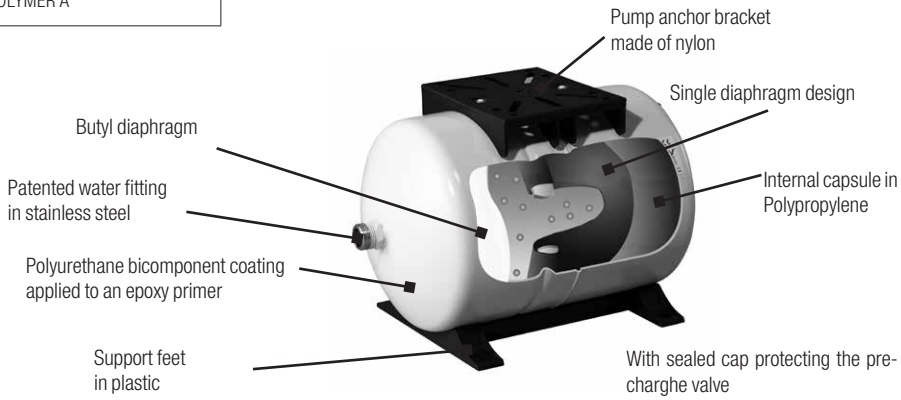

SELF PRIMING CAPACITY

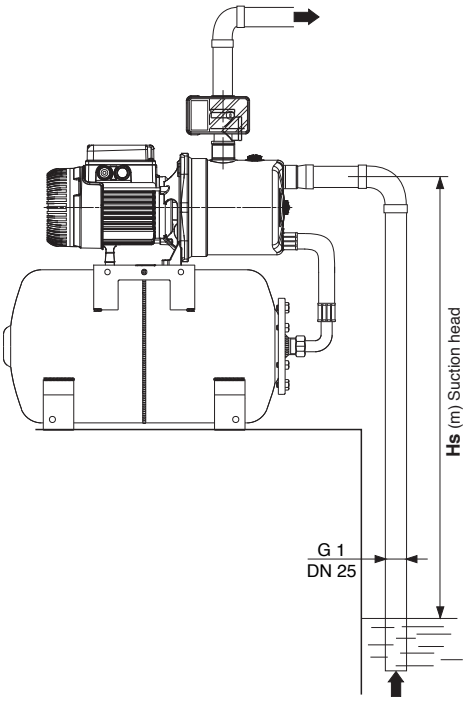

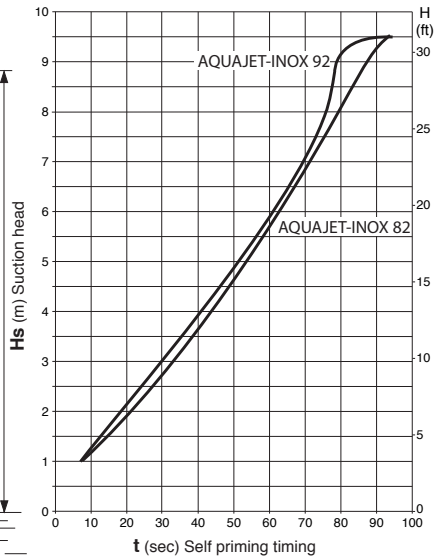

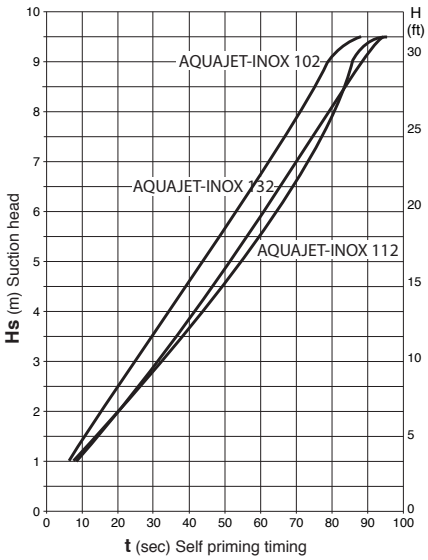

AQUAJETINOX - AUTOMATIC SELF-PRIMING PRESSURISATION GROUPS

Liquid temperature range pumped: from 0 °C to +35 °C - **Maximum ambient temperature:** +40°C

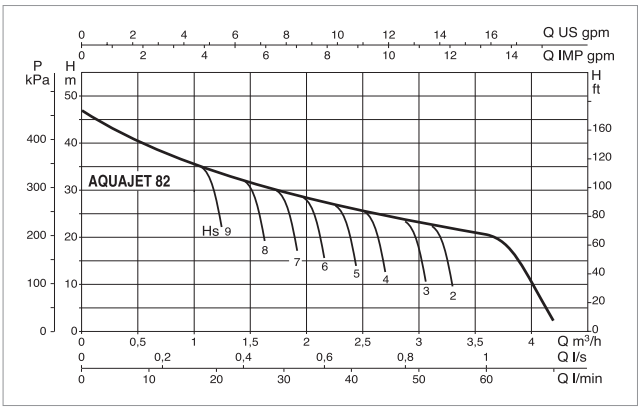

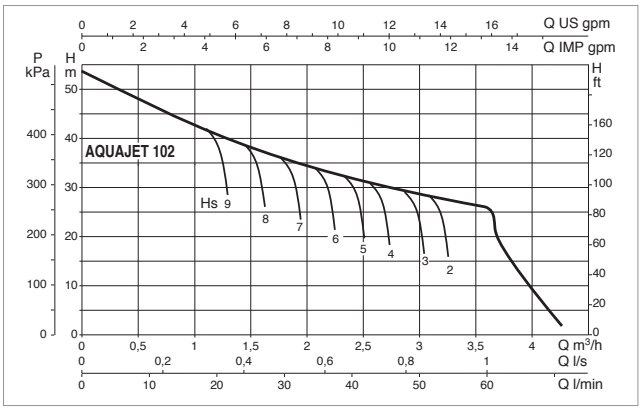

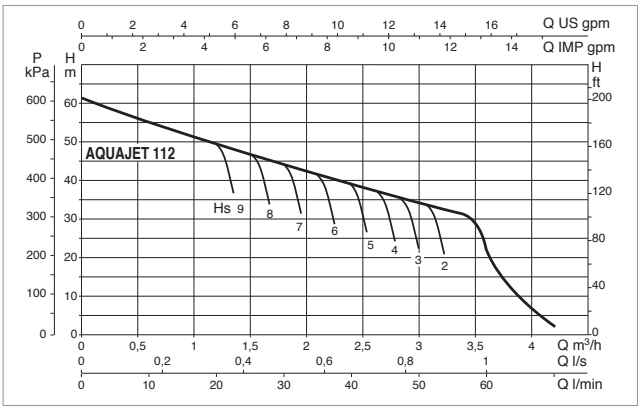

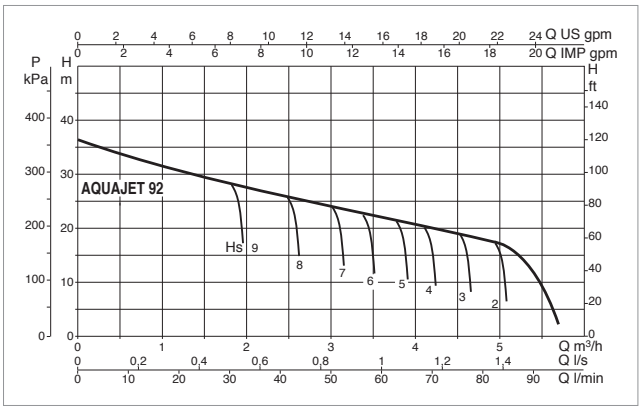

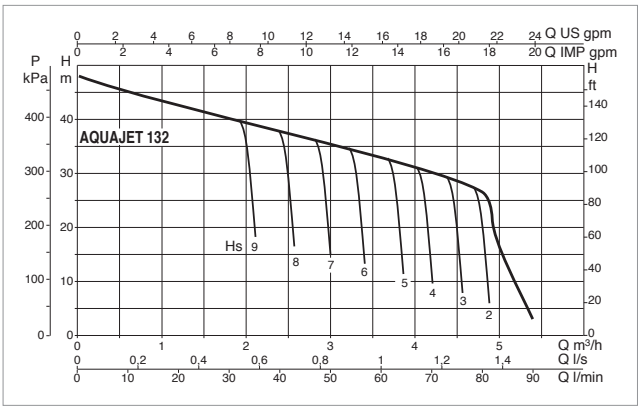

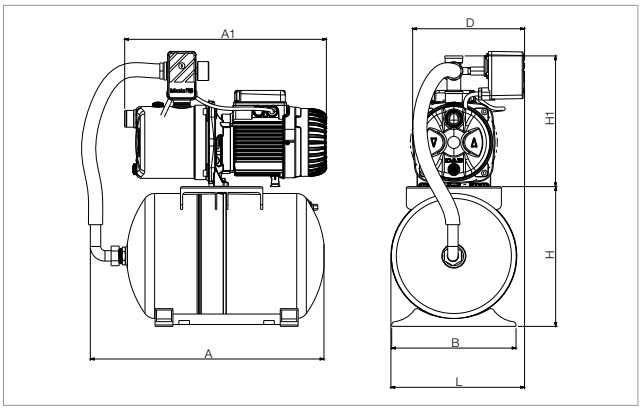

The performance curves are based on kinematic viscosity values = 1 mm²/s and density equivalent to 1000 kg/m³. Curve tolerance according to ISO 9906.

MODEL	ELECTRICAL DATA						
	POWER SUPPLY 50 Hz	P1 MAX kW	P2 NOMINAL		In A	CAPACITOR	
			kW	HP		µF	Vc
AQUAJET-INOX 82 M - G	1x220-240 V ~	0,85	0,6	0,8	3,8	12,5	450
AQUAJET-INOX 102 M - G	1x220-240 V ~	1,13	0,75	1	5,1	16	450
AQUAJET-INOX 112 M - G	1x220-240 V ~	1,4	1	1,36	6,2	25	450
AQUAJET-INOX 132 M - G	1x220-240 V ~	1,49	1	1,36	6,6	25	450

MODEL	A	A1	B	D	H	H1	L	DNA GAS	DNM GAS	PACKING DIMENSIONS			VOLUME (mc)	GROSS WEIGHT Kg
										L/A	L/B	H		
AQUAJET-INOX 82 M - G	494	406	263	237	296	277	283	1"	1"	566	360	629	0,102	15,3
AQUAJET-INOX 102 M - G	494	426	263	237	296	277	283	1"	1"	566	360	629	0,102	17,1
AQUAJET-INOX 112 M - G	494	426	263	237	296	277	283	1"	1"	566	360	629	0,102	18,1
AQUAJET-INOX 132 M - G	494	426	263	237	296	277	283	1"	1"	566	360	629	0,102	18,1

DAB PUMPS reserve the right to make modifications without prior notice

ACTIVE SYSTEM

AUTOMATIC ON/OFF PRESSURISATION SYSTEM

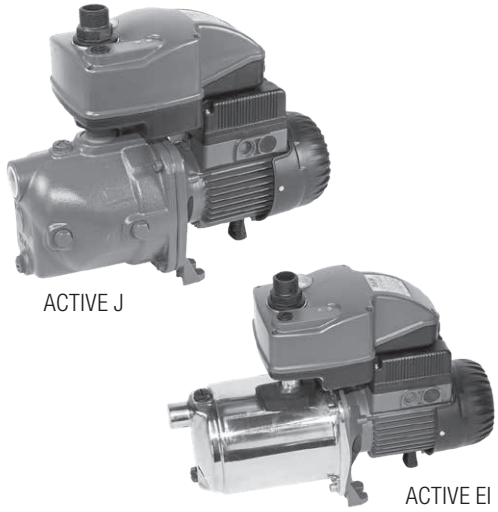

ACTIVE J

ACTIVE EI

TECHNICAL DATA

Operating range:
from 0.4 to 10.5 m^3/h with head up to 62 metres
Liquid quality requirements: clean, free from solid or abrasive contaminants, non-viscous, non-aggressive, uncrystallised and chemically neutral, close to the properties of water
Liquid temperature range: from 0°C to +35°C for domestic use (EN 60335-2-41). For other use: from 0°C to +40°C
Maximum ambient temperature: +40°C
Maximum operating pressure: 8 bar (800 kPa)
Installation: fixed in a horizontal position
Special executions on request: different frequencies and/or voltage
Motor protection rating: IP 44
Terminal block protection rating: IP 55
Insulation class: F
Standard input voltage: single phase 220/240 V / 50 Hz
three phase 230/400 V - 50 Hz

APPLICATIONS

ACTIVE is an automatic pumping system comprising a pump, a motor and an integrated control unit. It is especially suitable for domestic use, small civil, farming or industrial installations, washing plants and leisure activities.
The pump may be used to pump rainwater or potable or not-potable water.
The pumps that may be added to this system are:
- JET, JETINOX and JETCOM self-priming pumps or the EUROINOX multi-stage pumps suitable for operation in the presence of air or gas bubbles.
These are indispensable when drawing water from artesian wells and when there are problems with priming and suction.
- EURO, EUROCOM multi-stage pumps suitable for very quiet operation in positive suction head installation..

CONSTRUCTIONAL FEATURES OF THE PUMP

The ACTIVE system is easy to install and ready to use, integrated with the electric pump, which:
- controls it
- runs it automatically
- regulates its operation
- limits its start ups
- ensures pressure stability inside the hydraulic circuit
- enables electronic control of the start up pressure.

OPERATION

The ACTIVE system is an electronic device with a pressure switch and a flow switch, which enable the electric pump to always operate under the best conditions. Under minimal water pumping conditions, upon start up, the electric pump begins after the system pressure has dropped to its calibration pressure, which is adjustableby the user (from 1.5 to 4.5 bar under the pressure-flow switch or from 1.5 to 8 bar under the pressure switch). If there is a leak in the system, slight dripping or runs or if there is just a small draw, the ACTIVE system limits the number of electric pump start ups.
The system eliminates water hammers, because when the draw of water is stopped, the delayed stop of the electric pump comes with zero flow rate. If there is no water to be drawn, the ACTIVE system is triggered to avoid the dry running working pump. The system has LED signals and alarms. It has an automatic restart once the error conditions have been reset.
The ACTIVE system requires no maintenance or adjustment.

MATERIALS

N°	PARTS *	MATERIALS
1	DIAPHRAGM BODY	PA 66 30% FV
2	DIAPHRAGM	EPDM FOOD GRADE RUBBER
3	COUPLING + OR	POM-GF25 + NBR
4	SPRING	AISI 302 STAINLESS STEEL
5	VNR	POM COPOLYMER
6	OR GASKET	GOMMA EPDM

* In contact with liquid

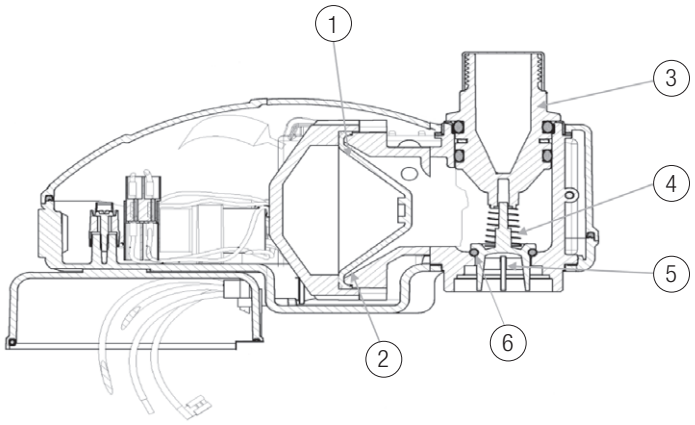

ACTIVE SYSTEM

AUTOMATIC ON/OFF PRESSURISATION SYSTEM

PERFORMANCE RANGE

The performance curves are based on kinematic viscosity values = 1 mm²/s and density equivalent to 1000 kg/m³. Curve tolerance according to ISO 9906.

GRAPHIC SELECTION TABLE

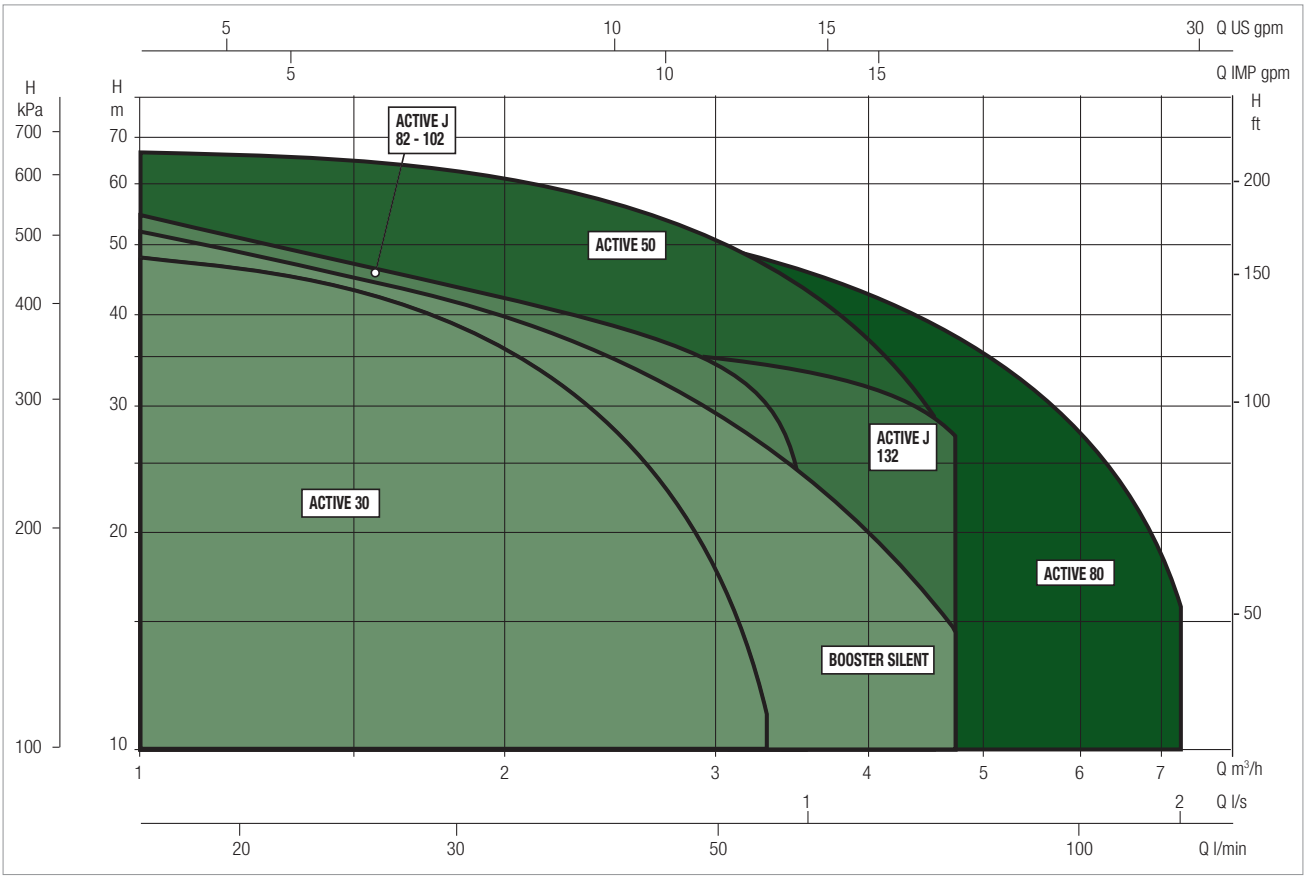

ACTIVE SYSTEM SELECTION TABLE

MODEL	Q=m³/h	0	0,6	1,2	1,8	2,4	3,0	3,6	4,2	4,8	6	7,2
	Q=l/min	0	10	20	30	40	50	60	70	80	100	120
ACTIVE J 82 M	H (m)	47	40	34	30	26,2	23,5	20,3				
ACTIVE J 102 M		53,8	47	41	36,3	32,4	28,8	25,8				
ACTIVE J 132 M		48,3	45,6	42,8	40	37,6	35	32,5	30	27,2		
ACTIVE JI 82 M		47	40	34	30	26,2	23,5	20,3				
ACTIVE JI 102 M		53,8	47	41	36,3	32,4	28,8	25,8				
ACTIVE JI 132 M		48,3	45,6	42,8	40	37,6	35	32,5	30	27,2		
ACTIVE JC 102 M		53,8	47	41	36,3	32,4	28,8	25,8				
ACTIVE JC 132 M		48,3	45,6	42,8	40	37,6	35	32,5	30	27,2		
ACTIVE EI 30/50 M		42,2	40,2	38,2	36,2	33,8	30	24,8	19,5	14		
ACTIVE EI 40/50 M		57,7	55,3	52,8	50,1	47,1	42,7	35,8	28	19,2		
ACTIVE EI 50/50 M		72	68,5	65,5	62,1	58,2	52,2	48	43,6	34,5	26	
ACTIVE EI 25/80 M		34		33	32	30,5	28,5	26	23,5	21	14,5	6,5
ACTIVE EI 40/80 M		59	58	57	56	54	51	47,5	43,8	39,5	29,5	16

ACTIVE J - AUTOMATIC ON/OFF PRESSURISATION SYSTEM

Liquid temperature range pumped: from 0 °C to +40 °C - **Maximum ambient temperature:** +40°C

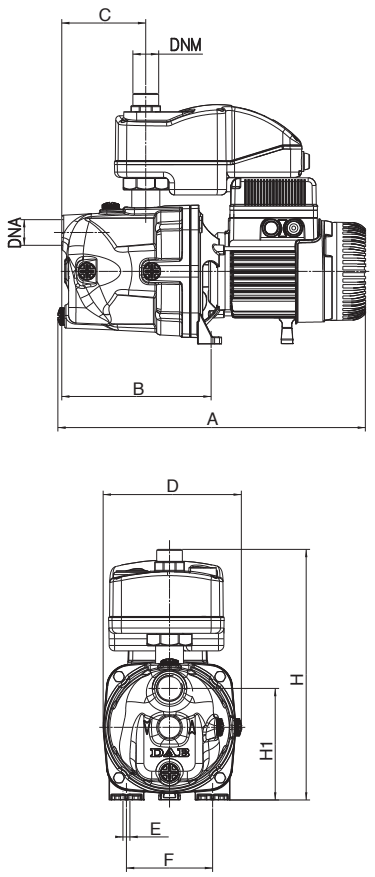

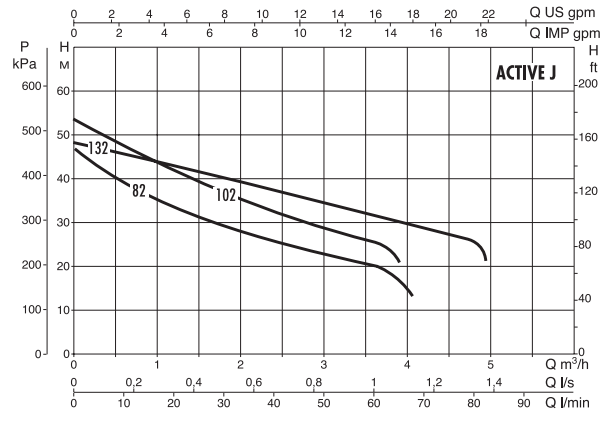

The performance curves are based on the kinematic viscosity values = 1 mm²/s and density equivalent to 1000 kg/m³. Curve tolerance according to ISO 9906.

MODEL	ELECTRICAL DATA						
	POWER SUPPLY 50 Hz	P1 MAX kW	P2 NOMINAL		In A	CAPACITOR	
			kW	HP		µF	Vc
ACTIVE J 82 M	1x220-240 V ~	0,85	0,6	0,8	3,8	12,5	450
ACTIVE J 102 M	1x220-240 V ~	1,13	0,75	1	5,1	16	450
ACTIVE J 132 M	1x220-240 V ~	1,49	1	1,36	6,6	25	450

MODEL	A	B	C	D	E	F	H	H1	DNA GAS	DNM GAS	PACKING DIMENSIONS			WEIGHT Kg
											L/A	L/B	C	
ACTIVE J 82 M	395	192	108	178	9	111	322	144	1 "	1 "	476	234	348	13,2
ACTIVE J 102 M	395	192	108	178	9	111	322	144	1 "	1 "	476	234	348	12,5
ACTIVE J 132 M	395	192	108	178	9	111	322	144	1 "	1 "	476	234	348	13,5

DAB PUMPS reserve the right to make modifications without prior notice

ACTIVE JI - AUTOMATIC ON/OFF PRESSURISATION SYSTEM

Liquid temperature range pumped: from 0 °C to +40 °C - **Maximum ambient temperature:** +40°C

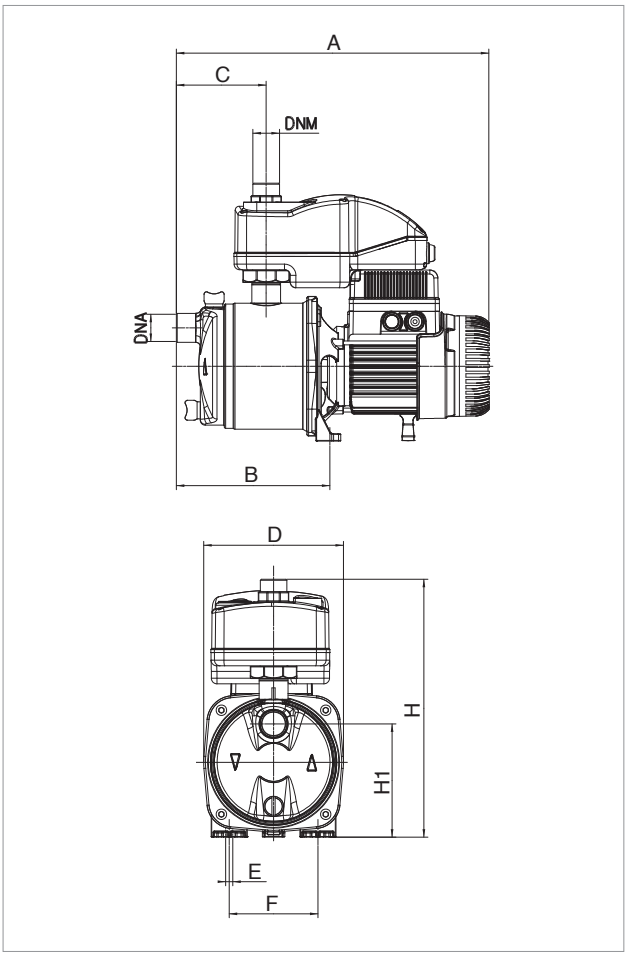

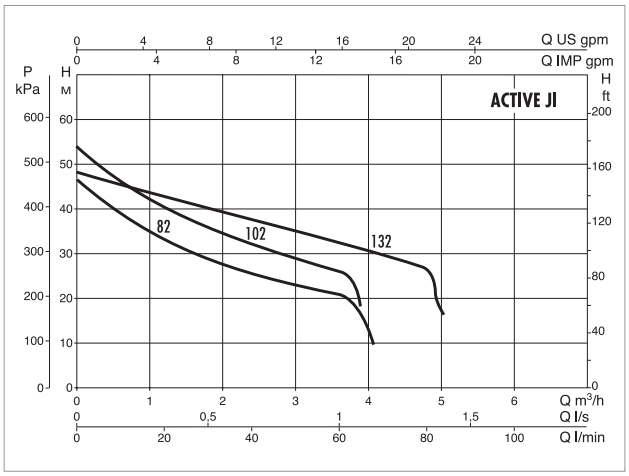

The performance curves are based on the kinematic viscosity values = 1 mm²/s and density equivalent to 1000 kg/m³. Curve tolerance according to ISO 9906.

MODEL	ELECTRICAL DATA						
	POWER SUPPLY 50 Hz	P1 MAX kW	P2 NOMINAL		In A	CAPACITOR	
			kW	HP		µF	Vc
ACTIVE JI 82 M	1x220-240 V ~	0,85	0,6	0,8	3,8	12,5	450
ACTIVE JI 102 M	1x220-240 V ~	1,13	0,75	1	5,1	16	450
ACTIVE JI 132 M	1x220-240 V ~	1,49	1	1,36	6,6	25	450

MODEL	A	B	C	D	E	F	H	H1	DNA GAS	DNM GAS	PACKING DIMENSIONS			WEIGHT Kg
											L/A	L/B	C	
ACTIVE JI 82 M	390	192	112	174	9	111	322	141	1 "	1 "	476	234	348	10,7
ACTIVE JI 102 M	390	192	112	174	9	111	322	141	1 "	1 "	476	234	348	12,5
ACTIVE JI 132 M	390	192	112	174	9	111	322	141	1 "	1 "	476	234	348	13,5

ACTIVE JC - AUTOMATIC ON/OFF PRESSURISATION SYSTEM

Liquid temperature range pumped: from 0 °C to +40 °C - Maximum ambient temperature: +40°C

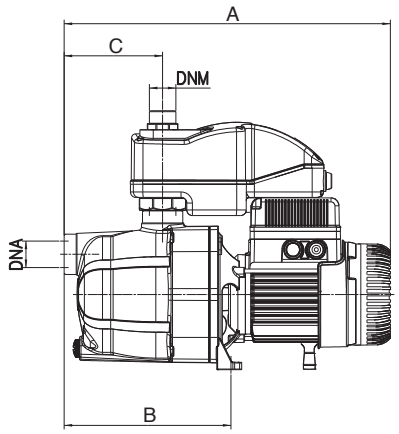

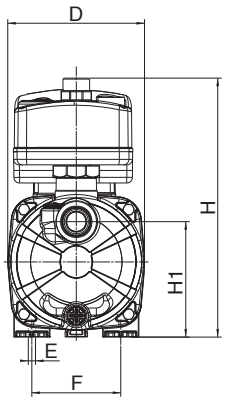

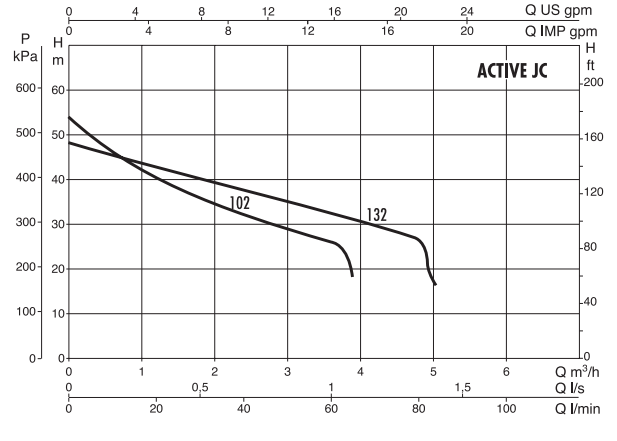

The performance curves are based on the kinematic viscosity values = 1 mm²/s and density equivalent to 1000 kg/m³. Curve tolerance according to ISO 9906.

MODEL	ELECTRICAL DATA						
	POWER SUPPLY 50 Hz	P1 MAX kW	P2 NOMINAL		In A	CAPACITOR	
			kW	HP		µF	Vc
ACTIVE JC 102 M	1x220-240 V ~	1,13	0,75	1	5,1	16	450
ACTIVE JC 132 M	1x220-240 V ~	1,49	1	1,36	6,6	25	450

MODEL	A	B	C	D	E	F	H	H1	DNA GAS	DNM GAS	PACKING DIMENSIONS			WEIGHT Kg
											L/A	L/B	C	
ACTIVE JC 102 M	406	208	122	170	9	111	322	144	1 "	1 "	476	234	348	12,5
ACTIVE JC 132 M	406	208	122	170	9	111	322	144	1"	1"	476	234	348	13,5

DAB PUMPS reserve the right to make modifications without prior notice

ACTIVE EI - AUTOMATIC ON/OFF PRESSURISATION SYSTEM

Liquid temperature range pumped: from 0 °C to +40 °C - Maximum ambient temperature: +40°C

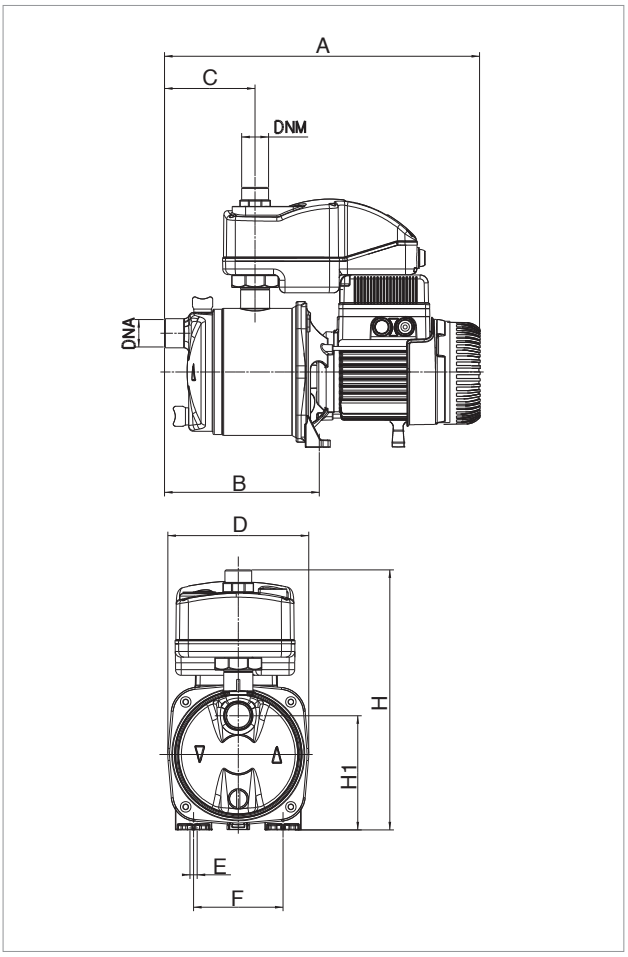

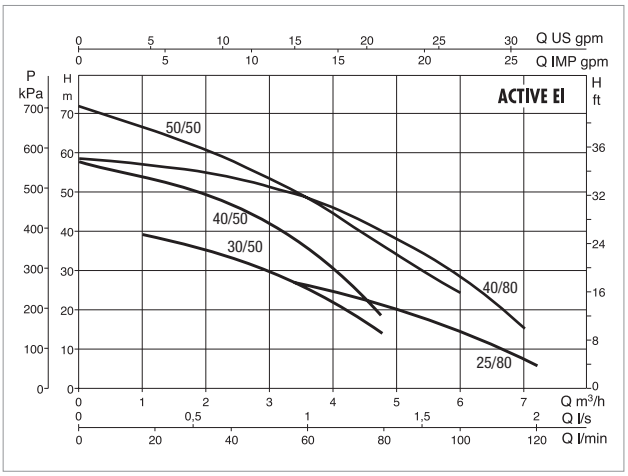

The performance curves are based on the kinematic viscosity values = 1 mm²/s and density equivalent to 1000 kg/m³. Curve tolerance according to ISO 9906.

MODEL	ELECTRICAL DATA						
	POWER SUPPLY 50 Hz	P1 MAX kW	P2 NOMINAL		In A	CAPACITOR	
			kW	HP		µF	Vc
ACTIVE EI 30/50 M	1x220-240 V ~	0,88	0,55	0,75	3,9	12,5	450
ACTIVE EI 40/50 M	1x220-240 V ~	1,2	0,8	1,1	5,3	20	450
ACTIVE EI 50/50 M	1x220-240 V ~	1,48	1	1,36	6,3	25	450
ACTIVE EI 25/80 M	1x220-240 V ~	0,88	0,55	0,75	3,9	12,5	450
ACTIVE EI 40/80 M	1x220-240 V ~	1,48	1	1,36	6,3	25	450

MODEL	A	B	C	D	E	F	H	H1	DNA GAS	DNM GAS	PACKING DIMENSIONS			WEIGHT Kg
											L/A	L/B	C	
ACTIVE EI 30/50 M	390	192	112	174	9	111	322	141	1"	1"	476	234	348	10
ACTIVE EI 40/50 M	445	247	167	174	9	111	322	141	1"	1"	476	234	348	15,5
ACTIVE EI 50/50 M	445	247	167	174	9	111	322	141	1 "	1 "	476	234	348	15,2
ACTIVE EI 25/80 M	390	192	112	174	9	111	322	141	1"	1"	476	234	348	9,5
ACTIVE EI 40/80 M	445	247	167	174	9	111	322	141	1 "	1 "	476	234	348	15

BOOSTER SILENT

AUTOMATIC ON/OFF PRESSURISATION SYSTEMS

TECHNICAL DATA

Operating range:
capacity up to 90 l/min; head up to 46 m
Liquid temperature range:
for domestic use: from +35°C to +35°C
for other use: from 0°C to +40°C
Liquid quality requirements:
Clean, free from solid or abrasive contaminants, non-viscous, non-aggressive, uncrystallised and chemically neutral
Maximum suction depth: 8 metres
Maximum ambient temperature: +40°C
Protection rating: IPX4
Insulation class: F
Installation: fixed or portable in a horizontal position
Special executions on request: alternative voltages and/or frequencies

APPLICATIONS

Automatic, self-priming up to 8 metres, pressurisation system with multi-impellers (3-4-5) and integrated electronics, for domestic water supply in gardens and small irrigation systems.

FEATURES

Hull in sound absorbant composite material, with technopolymer hydraulics. Carbon/ceramic mechanical seal. Single phase, asynchronous, continuous service motor cooled by the liquid being pumped. Incorporated thermo-amperometric protection and permanently inserted capacitor.
The system is equipped with an integrated electronics board, pressure and flow switches for automatic start and stop as soon as the taps are opened or closed. The electronics prevent the pump from dry-running. The system has LED signals and alarms. It has an automatic restart once the error conditions have been reset. The system is equipped with non-return valves in aspiration, 2 metre power cord and plug and a 2 litre tank.

MATERIALS

N°	PARTS	MATERIALS
1	PUMP BODY	TECHNOPOLYMER
2	NON-RETURN VALVE	TECHNOPOLYMER
3	NUT	UNI7474 A2 STAINLESS STEEL NUT
4	WASHER	A2 STAINLESS STEEL
5	OR GASKET	NBR
6	DIFFUSER PLUG	TECHNOPOLYMER
7	OR GASKET	NBR
8	DIFFUSER	TECHNOPOLYMER
9	IMPELLER	TECHNOPOLYMER
10	ROTOR SHAFT	AISI 416 STAINLESS STEEL UNI EN 10088-1 X12CrS13
11	WASHER	A2 STAINLESS STEEL
12	OR GASKET	NBR
13	MECHANICAL SEAL	SILICON - VITON
14	COUNTERFACE	STEA/NBR
15	BODY	TECHNOPOLYMER

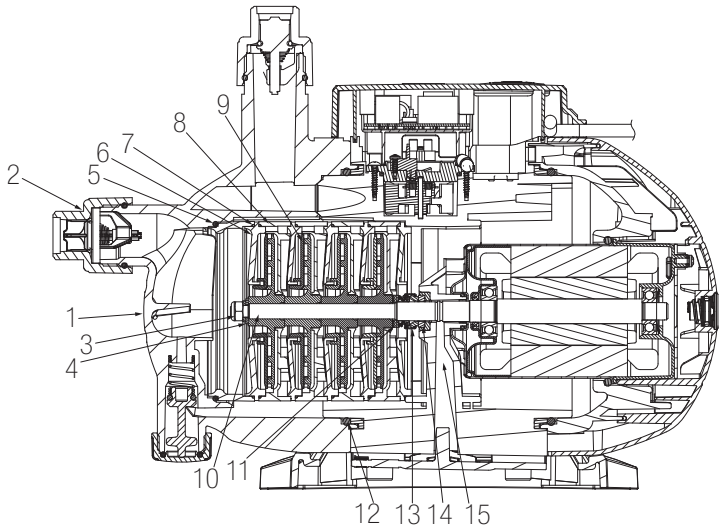

BOOSTER SILENT

AUTOMATIC ON/OFF PRESSURISATION SYSTEMS

PERFORMANCE RANGE

The performance curves are based on kinematic viscosity values = 1 mm²/s and density equivalent to 1000 kg/m³. Curve tolerance according to ISO 9906.

GRAPHIC SELECTION TABLE

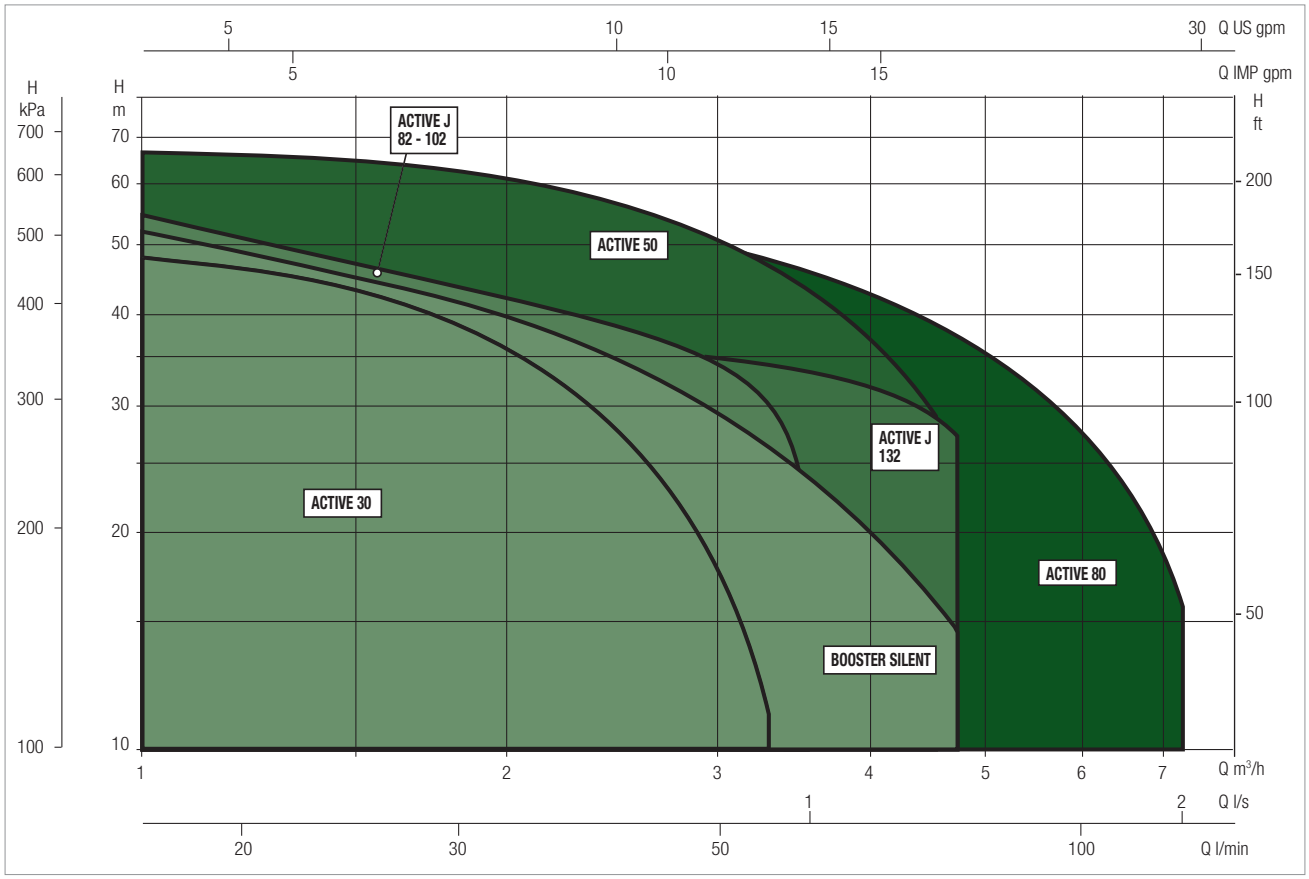

BOOSTER SILENT SELECTION TABLE

MODEL	Q=m³/h	0	0,6	1,2	1,8	2,4	3,0	3,6	4,2	4,8
	Q=l/min	0	10	20	30	40	50	60	70	80
BOOSTER SILENT 3 M	H (m)	37	34	32	31	27	23	19	15	8
BOOSTER SILENT 4 M		47	43	40	35	31	27	22	17	9
BOOSTER SILENT 5 M		57	52	48	43	38	31	25	18	10

BOOSTER SILENT - AUTOMATIC ON/OFF PRESSURISATION SYSTEMS

liquid temperature range pumped: from 0 °c to +35 °c - maximum ambient temperature: +40°c

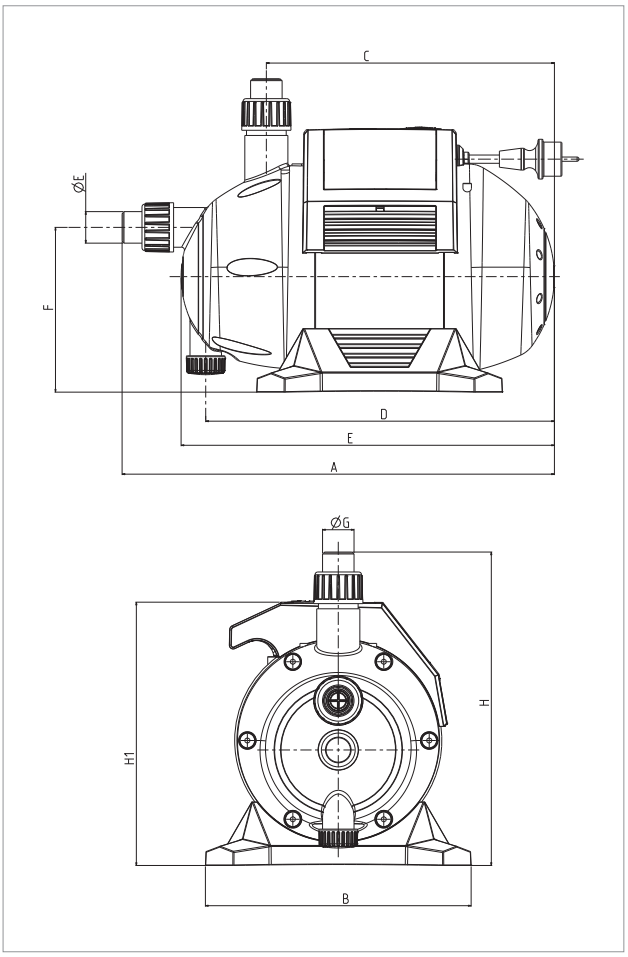

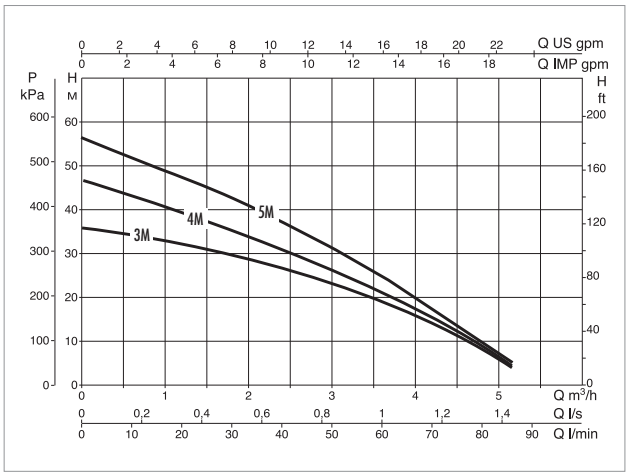

The performance curves are based on the kinematic viscosity values = 1 mm²/s and density equivalent to 1000 kg/m³. Curve tolerance according to ISO 9906.

MODEL	ELECTRICAL DATA					
	N° IMPELLER	POWER SUPPLY 50 Hz	P1 MAX KW	P2 NOMINAL		In A
				kW	HP	
BOOSTER SILENT 3 M	3	1 x 230 V ~	0,8	0,55	0,75	3,7
BOOSTER SILENT 4 M	4	1 x 230 V ~	1	0,75	1	4,7
BOOSTER SILENT 5 M	5	1 x 230 V ~	1,25	1	1,36	5,7

MODEL	A	B	C	D	E	F	Ø G	H	H1	DNA GAS	DNM GAS	PACKING DIMENSIONS			WEIGHT Kg	Q.TY x PALLET
												L/A	L/B	H		
BOOSTER SILENT 3 M	455	280	305	370	395	175	33	330	280	1 "	1 "	480	300	470	11,5	18
BOOSTER SILENT 4 M	455	280	305	370	395	175	33	330	280	1 "	1 "	480	300	470	11,5	18
BOOSTER SILENT 5 M	455	280	305	370	395	175	33	330	280	1 "	1 "	480	300	470	11,5	18

ESYBOX LINE

ELECTRONIC BOOSTER SETS

PERFORMANCE RANGE

The performance curves are based on kinematic viscosity values = 1 mm2/s and density equivalent to 1000 kg/m3. Curve tolerance according to ISO 9906.

GRAPHIC SELECTION TABLE

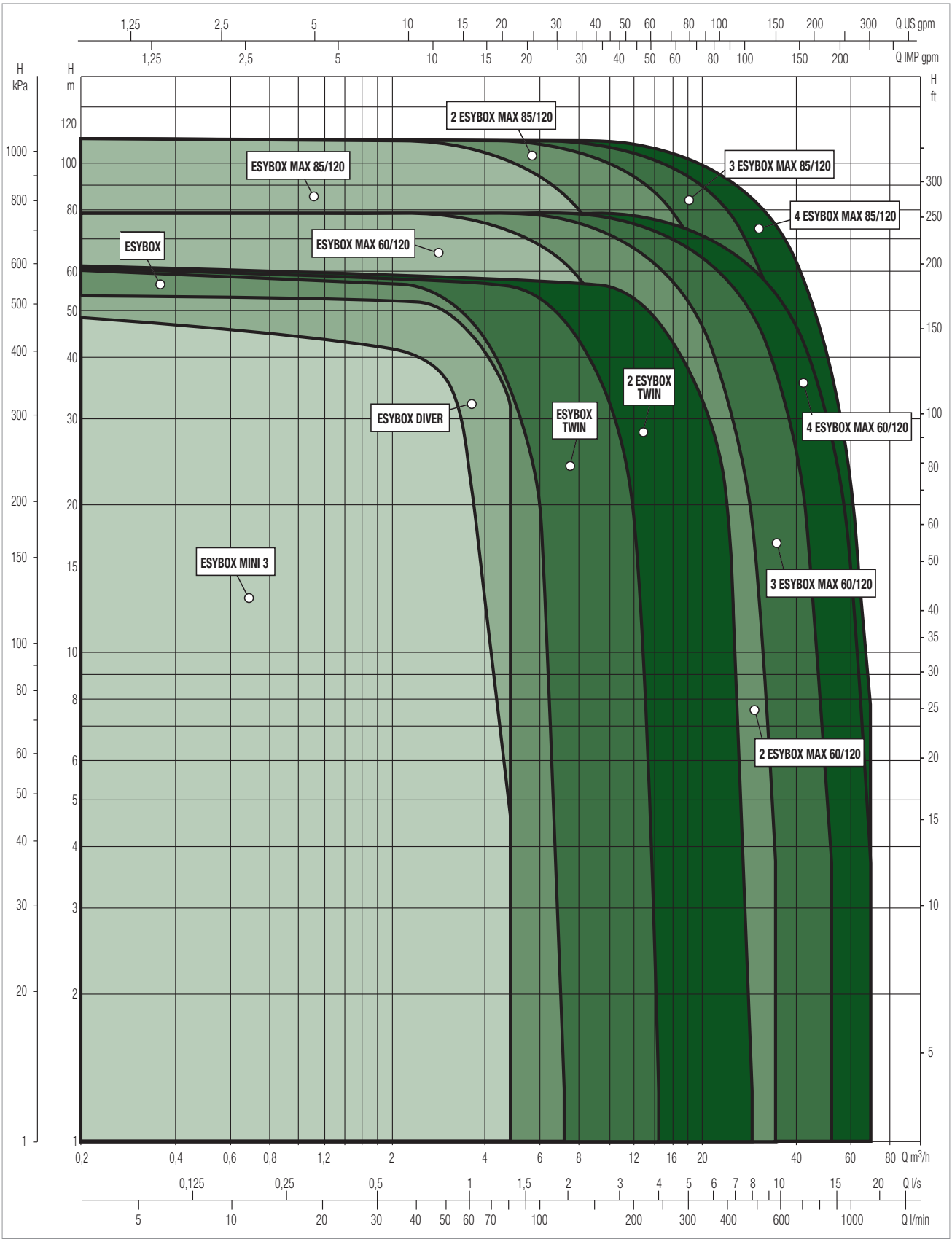

ESYBOX MINI 3

MODEL	Q=m³/h	0	0,6	1,2	1,8	2,4	3	3,6	4,2	4,8	5,4	6	6,6	7,2
	Q=l/min	0	10	20	30	40	50	60	70	80	90	100	110	120
ESYBOX MINI 3	H (m)	55	55	55	49	39	31	23	14	4				

ESYBOX

MODEL	Q=m³/h	0	0,6	1,2	1,8	2,4	3	3,6	4,2	4,8	5,4	6	6,6	7,2
	Q=l/min	0	10	20	30	40	50	60	70	80	90	100	110	120
ESYBOX	H (m)	65	63,5	61,5	59,5	57	53	48	41,5	35	27,5	19	10	2

DAB PUMPS reserve the right to make modifications without prior notice

ESYBOX MINI 3

ELECTRONIC PRESSURISATION SYSTEM

D+ CONNECT

TECHNICAL DATA

Flow rate: 4,8 m³/h
Head: 55 m
Type of pumped liquid : Clean, free from solid or abrasive substances, non-viscous, non-aggressive, non-crystallized and chemically neutral
Liquid temperature:
From +0°C to +35°C for domestic use
From +0°C to +40°C for other use
Maximum ambient temperature: +50°C
Maximum Suction depth: 8 m
Maximum Operation pressure: 7,5 bar / 750 kPa
Motor protection class: IP X4
Motor insulation class: F
Impeller material: Technopolymer
Single phase power input: 230 V 50 Hz
Power cord (m) and plug: 1,5 meter with power plug
Type of installation: Fixed, vertically, horizontally or on the wall with special accessories (supplied separately)
Certification: WRAS, ACS

Electronic self-priming multi-impeller pressurization system for rainwater reuse, ground water, gardening and irrigation and for watering small gardens in residential building service. Possibility of remote control thanks to the DConnect service (with DConnect Box supplied separately).

CONSTRUCTION FEATURES OF THE PUMP

Self-priming multi-impeller pump. Protective hull in sound-absorbing ABS. Technopolymer impellers. Motor shaft in stainless steel. Non-return valve and integrated expansion vessel.

CONSTRUCTION FEATURES OF THE MOTOR

Motor cooled by pumped liquid, stainless steel motor jacket. Complete with power cable and plug.

CONSTRUCTION FEATURES OF THE ELECTRONIC

Adjustable display. The variable frequency drive function saves energy and protects against water hammer. Guided procedure for the first start-up, easy configuration, possibility to view the alarm history.

MATERIALS

N°	PARTS	MATERIALS
1	MOTOR SLEEVE	STAINLESS STEEL AISI 304
2	O-RING	NBR
4	MOTOR BODY	PP OMO 30% GF
5	MECHANICAL SEAL DISC	PA 6.6 30% GF
9	MECHANICAL SEAL	CARBON IMPREGNATED RESIN / CERAMIC / NBR
12	DIFFUSER	NORYL
14	IMPELLER	NORYL
21	SUCTION BODY	PP OMO 30% GF
22	INSERT 1"	BRASS
23	SHUTTER SPRING	STAINLESS STEEL AISI 303
25	SELFPRIMING SHUTTER	POM
26	1" PLUG	PP OMO 30% GF
34	NON RETURN VALVE	TECHNOPOLYMER / RUBBER / STEEL
41	1" 1/4 PLUG	PA 6.6 30% GF
43	HEAT SINK	BRASS
45	DELIVERY BODY	PP OMO 30% GF
46	INSERT 1"	BRASS
48	VESSEL 1L	TECHNOPOLYMER / RUBBER
51	FLOWMETER WHEEL	POM
56	PRESSURE SENSOR BODY	TECHNOPOLYMER
69	1" PLUG	PA 6.6 30% GF

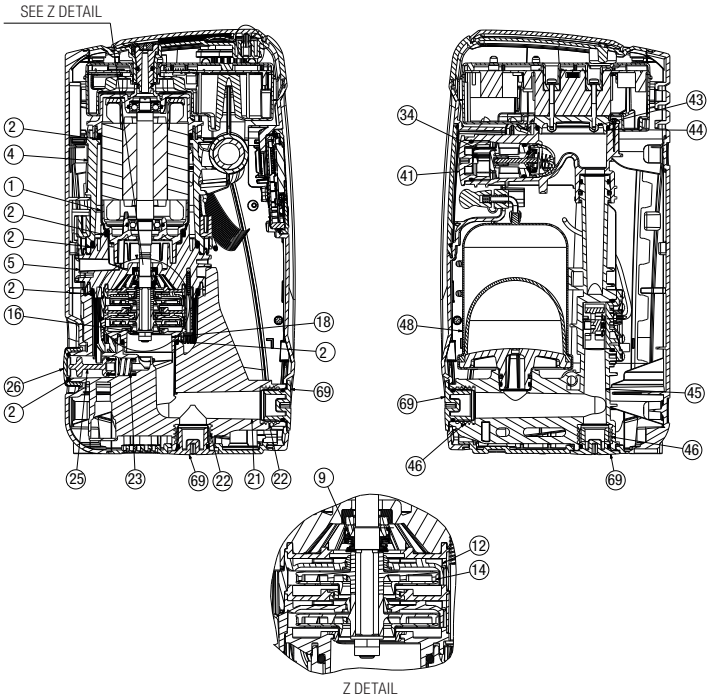

ESYBOX MINI 3 - ELECTRONIC PRESSURISATION SYSTEM

Liquid temperature range: from 0°C a +35°C for domestic use - from 0°C a +40°C for other uses. **Maximum ambient temperature:** +50°C

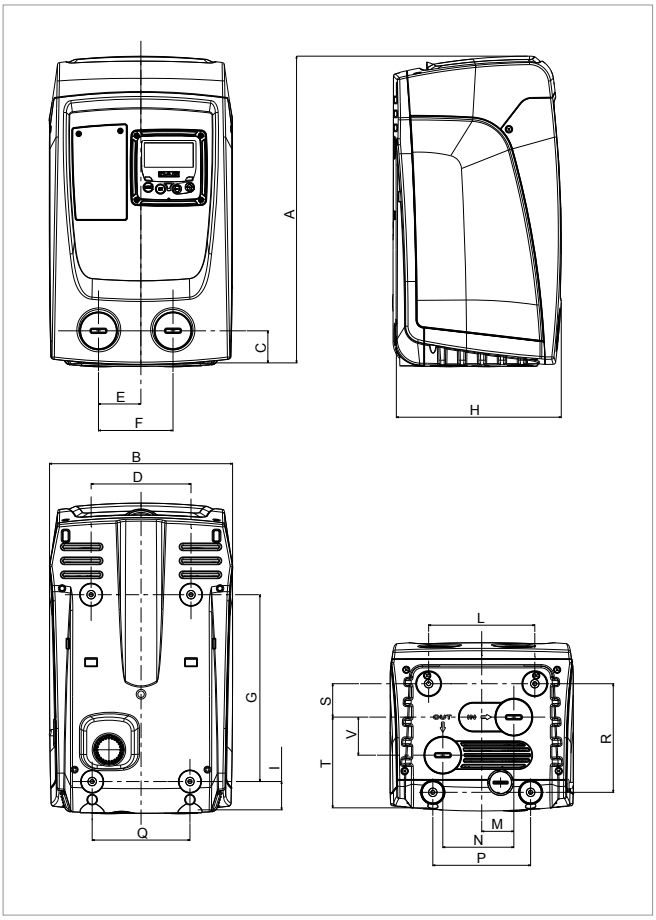

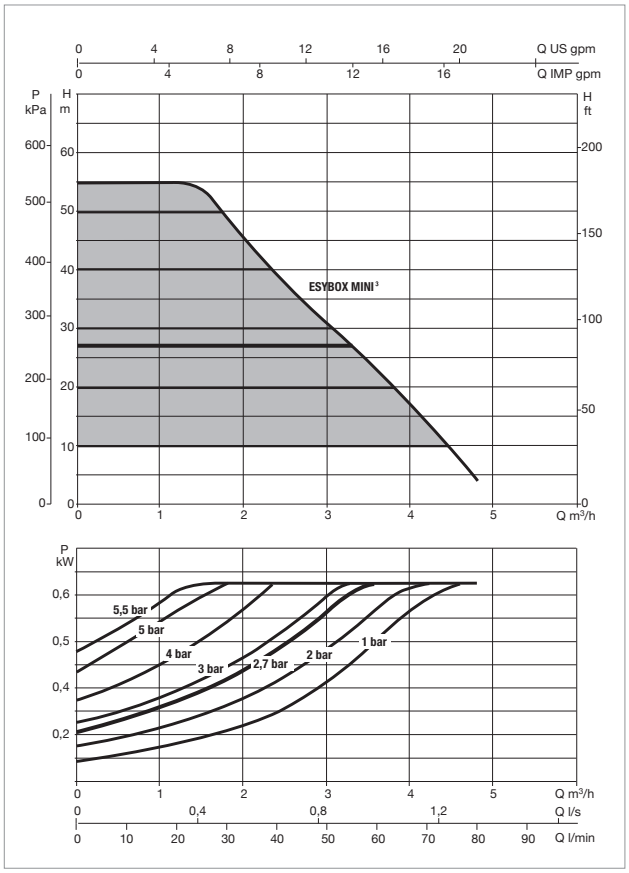

The performance curves are based on the kinematic viscosity values = 1 mm²/s and density equivalent to 1000 kg/m³. Curve tolerance according to ISO 9906.

MODEL	ELECTRICAL DATA				
	N° IMPELLER	POWER INPUT 50/60 Hz	P1 MAX		In A
			kW	HP	
ESYBOX MINI 3	3	1x220-240 V ~	0,85	1,1	4,8
ESYBOX KIWA 3	3	1x220-240 V ~	0,85	1,1	4,8

MODEL	A	B	C	D	E	F	G	H	I	L	M	N	P	Q	R	S	T	V	DNA	DNM	PACKING DIMENSIONS			WEIGHT Kg
																					L/A	L/B	H	
ESYBOX MINI 3	439	263	46	143	60,7	106,7	279,5	236	40,5	152	46	101,7	140	140	155,5	47,8	133	54,5	1 "	1 "	300	500	320	14,6
ESYBOX KIWA3	439	263	46	143	60,7	106,7	279,5	236	40,5	152	46	101,7	140	140	155,5	47,8	133	54,5	1 "	1 "	300	500	320	14,6

ESYBOX

ELECTRONIC PRESSURISATION SYSTEM

D+ CONNECT

TECHNICAL DATA

Flow rate: Up to a 7,2 m³/h
Head: 65 m
Type of pumped liquid : Clean, free from solid or abrasive substances, non-viscous, non-aggressive, non-crystallized and chemically neutral
Liquid temperature : +40°C
Maximum ambient temperature: +50°C
Maximum suction depth: 8 m
Maximum operation pressure: 8 bar / 800 kPa
Motor protection class: IP X4
Motor insulation class: F
Impeller material: Technopolymer
Single phase power input: 230 V 50 Hz
Power cord (m) and plug: 1,5 meters with power plug
Type of installation: Fixed, vertically, horizontally or on the wall with special accessories (supplied separately)
Certification: WRAS, ACS

Multi-impeller self-priming electronic system for pressurization, rainwater reuse, drawing ground water, gardening and irrigation and agriculture and irrigation in residential building service and commercial building service. Possibility to connect up to four Esybox together to create pressure units. Adjustable display. Possibility of remote control thanks to the DConnect service (with DConnect Box supplied separately). The careful choice of materials and the water-cooled motor make the pump particularly quiet, just 43 dB, suitable for installation even in living areas. Can be positioned vertically, horizontally or on the wall with special accessories (supplied separately).

CONSTRUCTION FEATURES OF THE PUMP

Self-priming multi-impeller pump. 2-liter expansion vessel incorporated. Protective hull in sound-absorbing ABS. Technopolymer impellers. Integrated flow and pressure sensors.

CONSTRUCTION FEATURES OF THE MOTOR

Motor cooled by the pumped liquid, stainless steel motor jacket. Motor shaft in AISI 303 stainless steel.

CONSTRUCTION FEATURES OF THE ELECTRONIC

Adjustable display. The variable frequency drive function saves energy and protects against water hammer. Integrated protections: protection from dry running, amperometric and anomalous voltages, overtemperature, frost, anti-blocking and anti-cycling. Construction according to CEI 2-3 / CEI 61-69 (EN 60335-2-41). Guided procedure for the first start-up, easy configuration, possibility to display the alarm history. Wireless connection.

MATERIALS

N°	PARTS *	MATERIALS
1	MOTOR FLANGE	TECHNOPOLYMER
2	ROTOR SHAFT	AISI 303 STAINLESS STEEL
3	MOTOR JACKET	AISI 304 STAINLESS STEEL
5	OR GASKET	NBR
7	SINTERED PLATE	AISI 304 STAINLESS STEEL
11	1'' PLUG	TECHNOPOLYMER
13	SUCTION BODY	TECHNOPOLYMER
14	1'' INSERT	NICKLED BRASS
15	SHUTTER	TECHNOPOLYMER
17	SPRING	AISI 303 STAINLESS STEEL
20	DIFFUSER	TECHNOPOLYMER
21	DIFFUSER BODY	TECHNOPOLYMER
22	IMPELLER	TECHNOPOLYMER
22c	SHIM RING	AISI 316 STAINLESS STEEL
24	NUT	AISI 316 STAINLESS STEEL
25	DIFFUSER END PLUG	TECHNOPOLYMER
27	MECHANICAL SEAL	CARBON IMPREGNATED RESIN / SILICON CARBIDE / EPDM
28	PUMP BODY	TECHNOPOLYMER
30	DISCHARGE BODY	TECHNOPOLYMER
36	FLOW SWITCH BODY	TECHNOPOLYMER
41	PRESS. STABLE. IMPELLER	TECHNOPOLYMER
46	DISCHARGE MANIFOLD	TECHNOPOLYMER
47	1'' 1/4 PLUG	TECHNOPOLYMER
52	NON-RETURN VALVE	TECHNOPOLYMER / RUBBER / STEEL
57	TANK	TECHNOPOLYMER / RUBBER
58/1	PRESSURE SENSOR BODY	TECHNOPOLYMER

* In contact with liquid

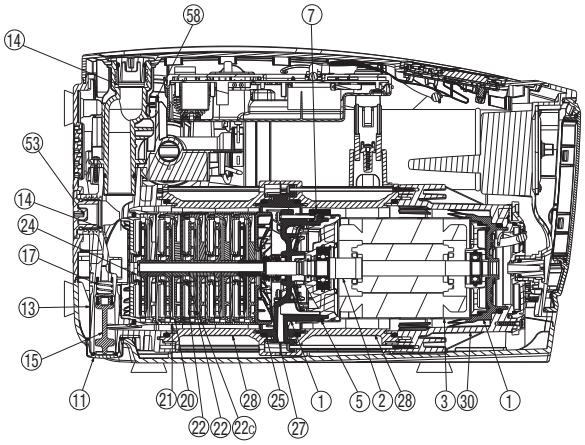

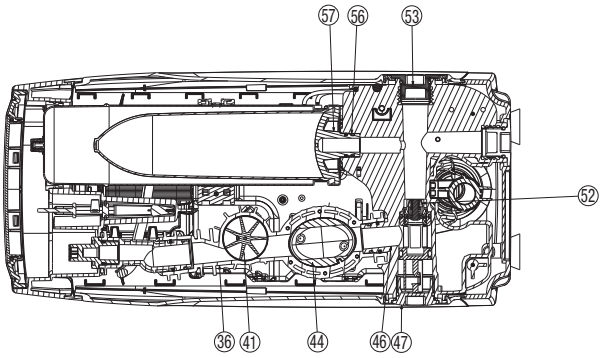

ESYBOX - ELECTRONIC PRESSURISATION SYSTEM

Liquid temperature range: from 0°C to +35°C for domestic use - from 0°C to +40°C for other uses. - **Maximum ambient temperature:** +50°C

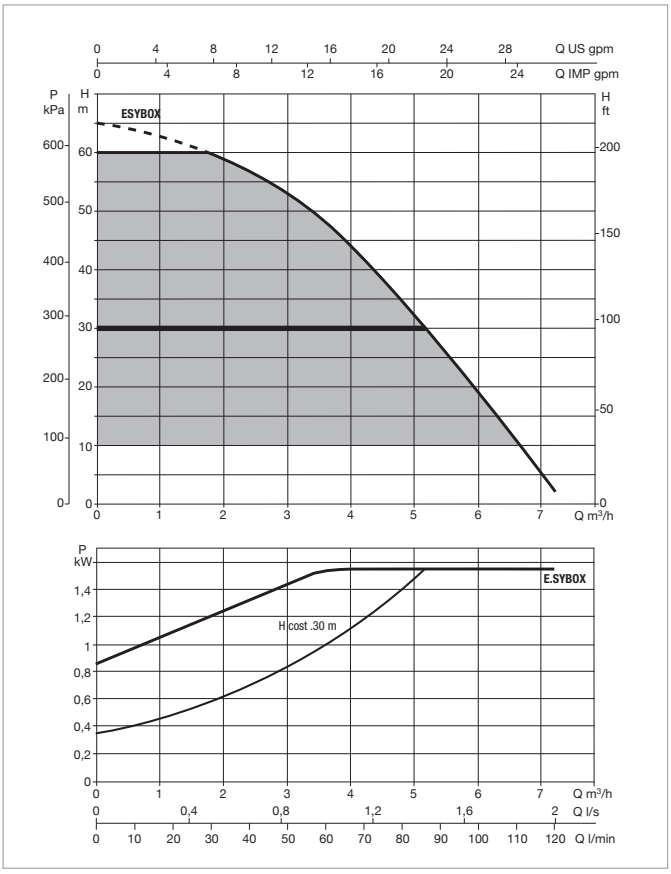

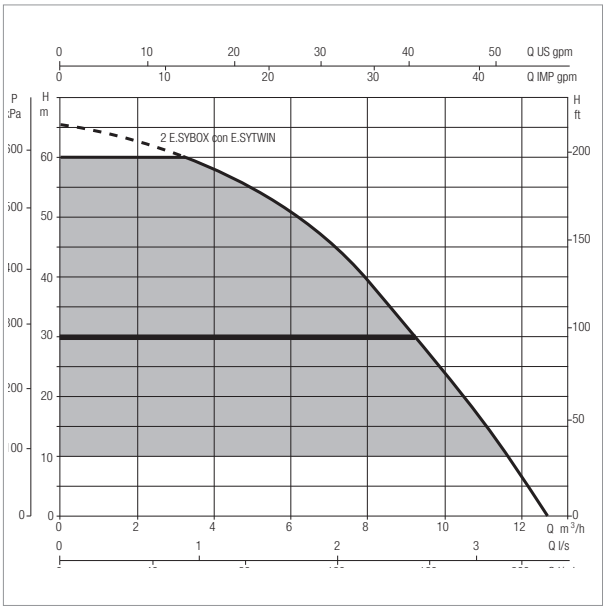

Perfromance rtefers to 2 assembled Esybox in Esytwin.
Pressure losses included

The performance curves are based on the kinematic viscosity values =
1 mm²/s and density equivalent to 1000 kg/m³. Curve tolerance according to ISO 9906.

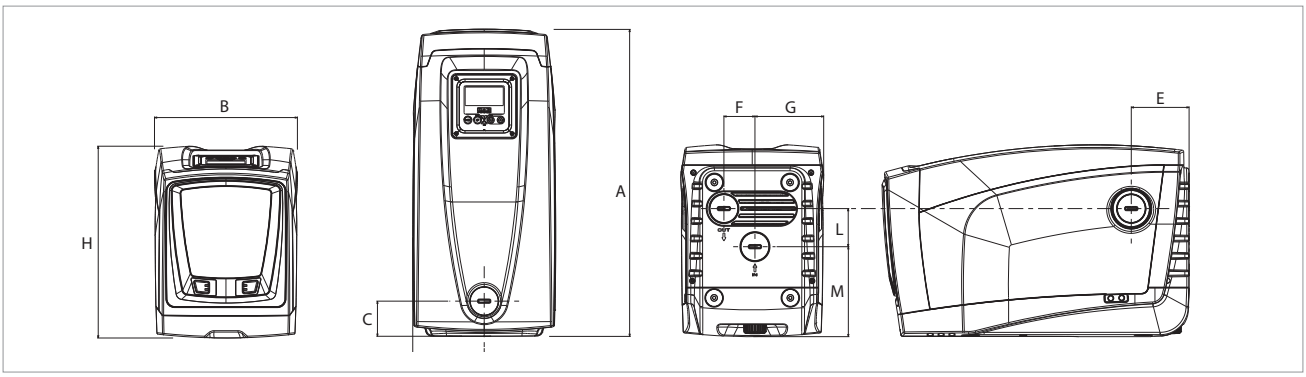

MODEL	ELECTRICAL DATA				
	N° IMPELLER	POWER SUPPLY 50/60 Hz	P1 MAX		In A
			kW	HP	
ESYBOX	5	1 x 220 - 240 V ~	1.55	2.11	10
ESYBOX - KIWA	5	1x220-240 V ~	1,55	2,1	10

MODEL	A	B	C	D	E	F	G	I Ø	H	L	M	DNA	DNM	PACKING DIMENSIONS			GROSS Kg
														L/A	L/B	H	
ESYBOX	564	263	65	131.5	106	57	126.2	9	362	70	165.2	1"	1"	685	360	490	27
ESYBOX - KIWA	564	263	65	131,5	106	57	126,2	9	362	70	165,2	1"	1"	685	360	490	27

NBB

ACCUMULATION AND PRESSURISATION ASSEMBLY KIT

TECHNICAL DATA

Operating range:
From 10 to 120 litres/min. with head up to 72 m.
Liquid temperature range:
for domestic use: from 0°C to +35°C
Liquid quality requirements:
Suitable for potable water pursuant to
EN1717 and EN13077 European standards.
Maximum ambient temperature: +40°C
Max. operational pressure: 8 bar (800 kPa) for surface pump configurations
Max. inlet pressure: 6 bar
Protection rating:
IP44 for surface pumps
IP68 for submerged pumps
Insulation class: F

APPLICATIONS

The NBB pressurization system comprises a water accumulation tank and a pump (w or w/o inverter).
NBB is the solution for the creation of a pressurization system
for domestic use, where the mains pressure is not sufficient and a system with a water accumulation tank is required.
This is based on a modular concept. The kit comprises an NBB tank, a submerged or surface pump, an inverter - in the event the pump does not have integrated electronics - and an installation kit, including an expansion tank, where one is not integrated with the pump.
In all of its many configurations, NBB stands out becuase of its small size, its easy use and in the inverter version, its energy saving convenience.

FEATURES

NBB comprises:
- 280 litre tank for potable water, compliant with the EN1717 and EN13077 European standards
- fill and overflow valves pre-assembled
- protective screen included in the kit.

Using the kit for the addition of the auxiliary 280 litre tank, the connection tube with gaskets and clamps, the system capacity may be doubled.
In addition to the NBB, the user may choose an assembly kit that meets the needs of the specific type of pump or a pump + inverter being installed.
The pump and inverter are not included in the kit. they must be ordered separately.
The installation kit includes all required accessories for installing the pump and inverter on the NBB tank.
The Pulsar and Euroinox installation kits a 4 litre expansion tank is provided for.

NBB MATERIALS

N°	PARTS	MATERIALS
1	TANK	TECHNOPOLYMER
2	FLOAT	TECHNOPOLYMER
3	90° ELBOW	TECHNOPOLYMER
4	AERATOR	TECHNOPOLYMER
5	OVERFLOW TUBE	TECHNOPOLYMER

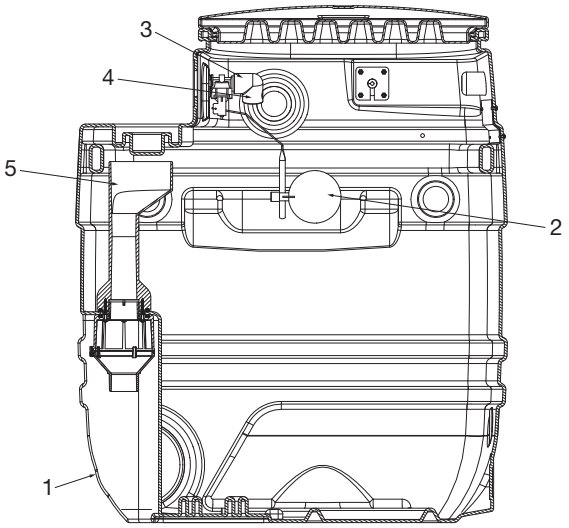

MATERIALS

NBB+Divertron

N°	PARTS	MATERIALS
1	NBB TANK	TECHNOPOLYMER
2	ANTIVIBRATION	NBR
3	REDUCER	BRASS
4	M/M EXTENSION	BRASS
5	90° FITTING	BRASS
6	FLEX HOSE	AISI 304 STAINLESS STEEL
7	STRAIGHT FITTING	BRASS
8	REDUCER SLEEVE	BRASS
9	BALL VALVE	BRASS

NBB+Euroinox

N°	PARTS	MATERIALS
1	NBB TANK	TECHNOPOLYMER
2	SUCTION TUBE	TECHNOPOLYMER / BRASS
3	CURVE FITTING	BRASS
4	M/M EXTENSION	BRASS
5	2 PIECE FITTING	BRASS
6	NIPPLE	BRASS
7	T FITTING	BRASS
8	5 LITRE EXPANSION TANK	STAINLESS STEEL / RUBBER
9	BALL VALVE	BRASS

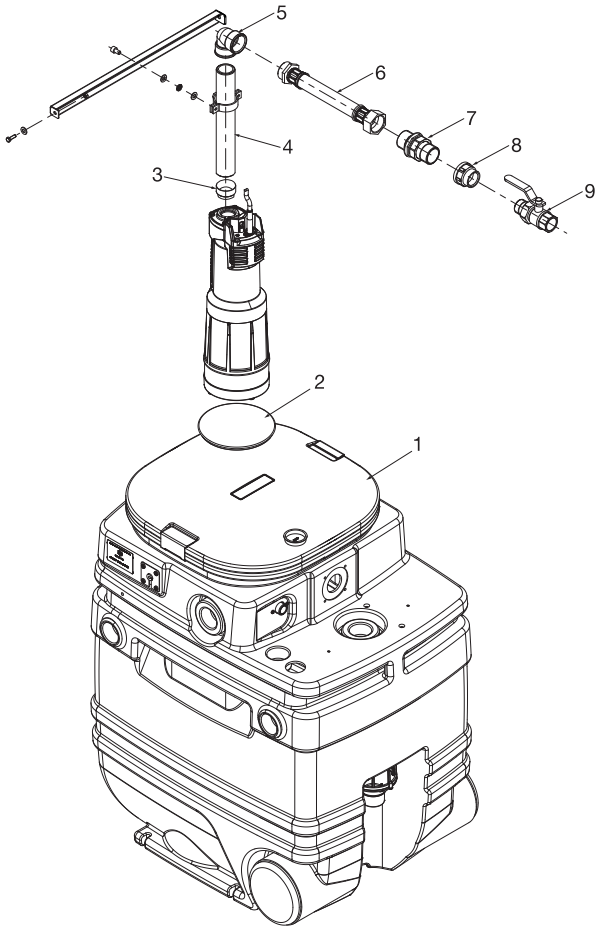

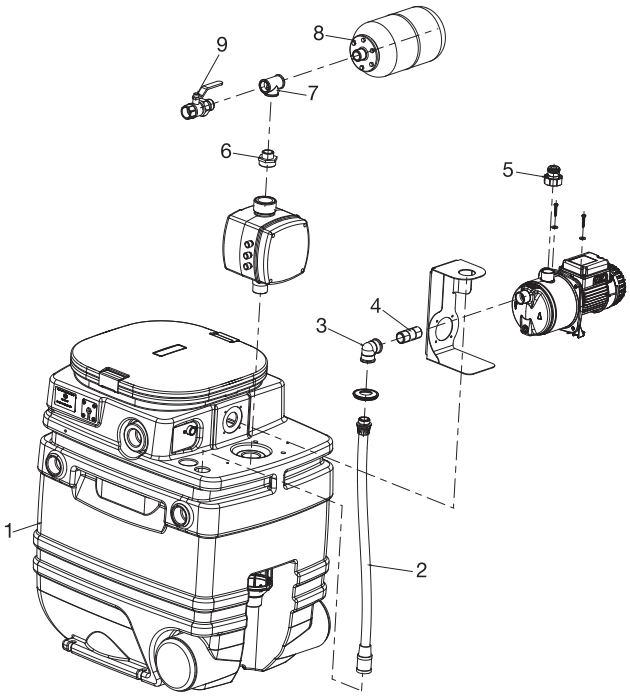

NBB

ACCUMULATION AND PRESSURISATION ASSEMBLY KIT

MATERIALS

NBB+Active

N°	PARTS	MATERIALS
1	TANK	TECHNOPOLYMER
2	SUCTION TUBE	TECHNOPOLYMER / BRASS
3	CURVE FITTING	BRASS
4	M/M EXTENSION	BRASS
5	THREAD-SAVER PLUG	TECHNOPOLYMER

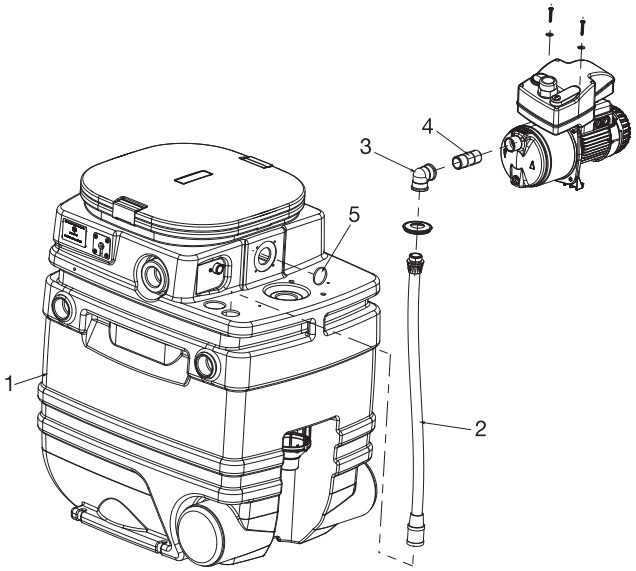

NBB+Pulsar

N°	PARTS	MATERIALS
1	NBB TANK	TECHNOPOLYMER
2	ANTIVIBRATION	NBR
3	NIPPLE	BRASS
4	COLLAR	STAINLESS / RUBBER
5	CHECK VALVE	BRASS
6	90° FITTING	BRASS
7	BRACKET	AISI 304 STAINLESS STEEL
8	SCREWS	A2 STAINLESS STEEL
9	FLEX HOSE	AISI 304 STAINLESS STEEL
10	STRAIGHT FITTING	BRASS
11	3 PIECE FITTING	BRASS
12	NIPPLE	BRASS
13	T FITTING	BRASS
14	5 LITRE EXPANSION TANK	STAINLESS STEEL / RUBBER
15	BALL VALVE	BRASS

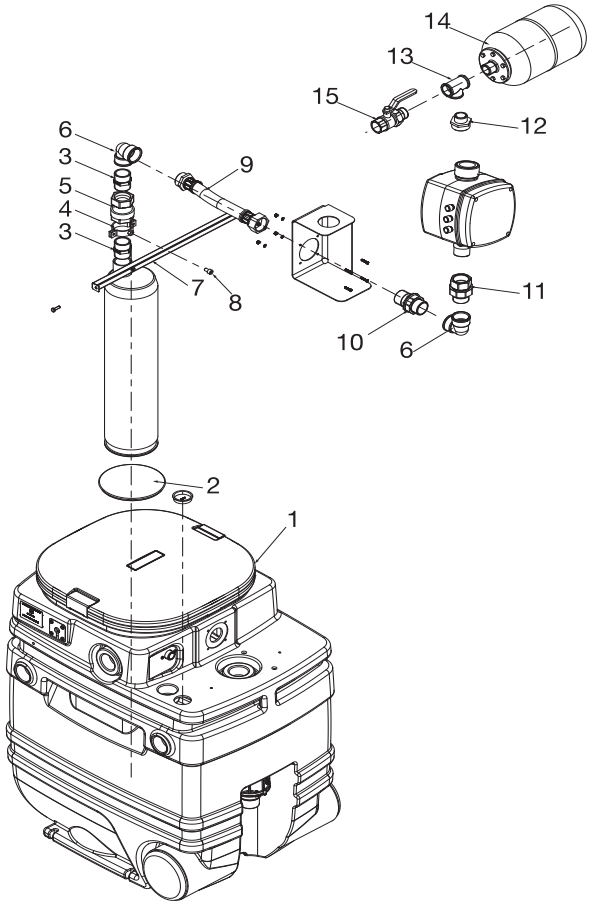

NBB - ACCUMULATION AND PRESSURISATION ASSEMBLY KIT

Liquid temperature range pumped: from 0 °C to +35 °C - Maximum ambient temperature: +40°C

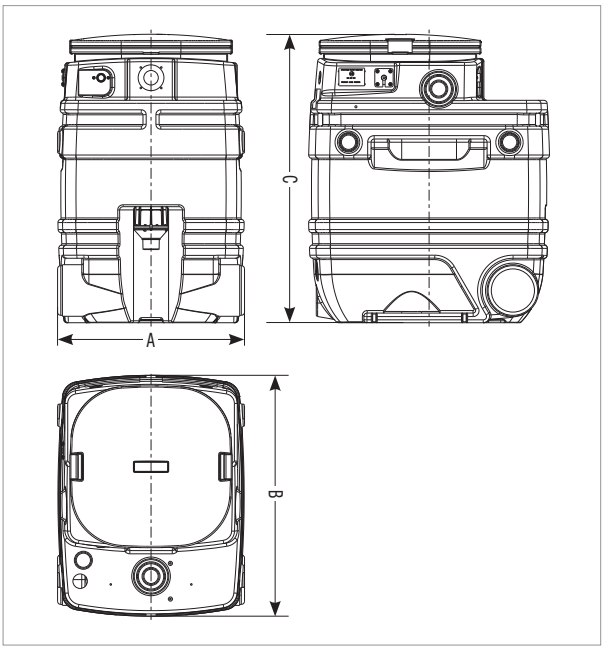

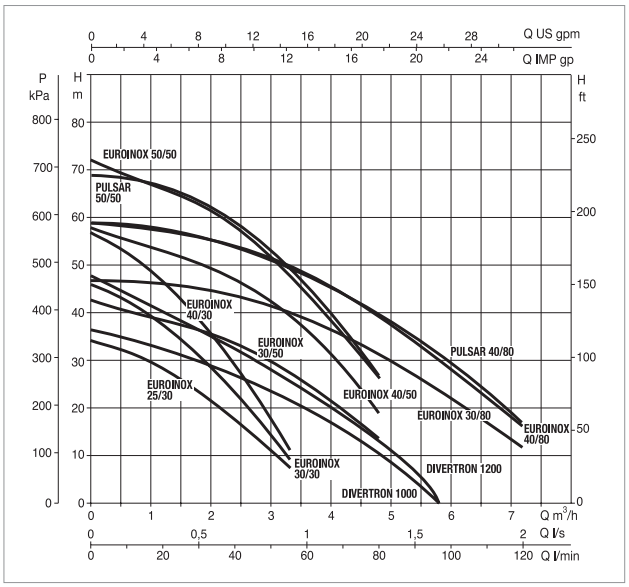

The performance curves are based on the kinematic viscosity values = 1 mm^2/s and density equivalent to 1000 kg/m^3. Curve tolerance according to ISO 9906.

MODEL	ELECTRICAL DATA						
	POWER SUPPLY 50 Hz	P1 MAX KW	P2 NOMINAL		In A	CAPACITOR	
			kW	HP		µF	Vc
EUROINOX M (all models)	1x220-240 V ~ 50 Hz	0,5 - 1,5	0,37 - 1	0,5 - 1,36	2,4 - 6,5	-	-
EUROINOX T (all models)	3x230 V ~ 50 Hz	0,9 - 1,5	0,55 - 1	0,75 - 1,36	2,8 - 4,4	-	-
ACTIVE EI (all models)	1x220-240 V ~ 50 Hz	0,5 - 1,5	0,37 - 1	0,5 - 1,36	2,4 - 6,5	-	-
PULSAR 50/50 M-NA	1x220-240 V ~ 50 Hz	1,45	1	1,36	6,5	25	450
PULSAR 50/50 T-NA (3x230V)	3x230 V ~ 50 Hz	1,35	1	1,36	4,15	-	-
PULSAR 40/80 M-NA	1x220-240 V ~ 50 Hz	1,45	1	1,36	6,5	25	450
PULSAR 40/80 T-NA (3x230V)	3x230 V ~ 50 Hz	1,35	1	1,36	4,15	-	-
DIVERTRON 1200 M	1x220-240 V ~ 50 Hz	1,1	0,75	1	4,7	12,5	450

MODEL	A	B	C	DNA GAS	DNM GAS	PACKING DIMENSIONS			WEIGHT Kg
						L/A	L/B	H	
KIT NBB WRAS TANK 280 LITERS (GRID INCL.)	580	747	895	¾"	1"	590	790	910	16,9

DAB PUMPS reserve the right to make modifications without prior notice

ACTIVE SWITCH

PLANTS FOR USE OF RAINWATER

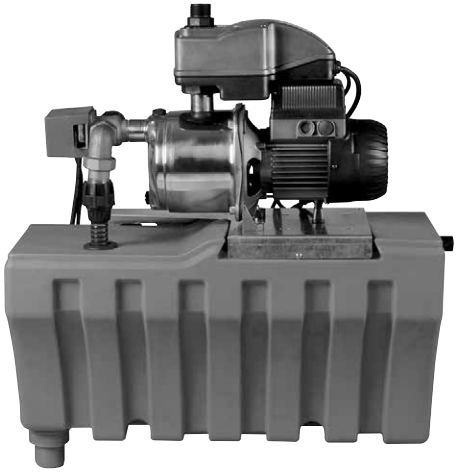

TECHNICAL DATA

Max capacity (lt/min-m3/h): 80-4.8
Max head: 42.2 m
Max. Liquid temperature: FROM +5°C TO +35°C
Max. system pressure: Max 6 bar
Max. mains pressure: Max 4 bar
Minimum mains flow rate: Min 10 lt/min
Maximum height of the highest point of use: 15 m
Power supply: Volt 220-240 Hz50
Maximum power absorbed: 880 W
Protection rating: IP 20
Ambient temperature: Min +5 °C Max +40 °C
Tank materials PE
Mains inlet pipe dimensions: 3/4”
Discharge pipe dimensions: 1”
Suction pipe dimensions: 1”
Overflow pipe dimensions: DN 50
Max Altitude: 1000 metres
Water type: ph 4-9
ON/OFF float version: ON/OFF float with 20 metre cable
Dry weight in Kg: 15
Operational weight in Kg: 30

APPLICATIONS

The ACTIVE SWITCH unit is used for rainwater management. The unit detects a lack of water in the collection system, whether from rainwater or the mains and makes corrections to ensure proper operation of the plant (that is, it does not ever leave the connected utilities dry). Generally, this system is reserved for irrigation, clothes washing, WC flushing and floor cleaning applications. The primary purpose of the ACTIVE SWITCH system is to give use of the rainwater priority over the use of the mains water. When there is not enough rainwater in the collection tank, the control unit switches over to the mains, ensuring that the connected use points are supplied (PLEASE, NOTE the water supplied by this system is not potable). The connection between the rainwater collection tank and the mains water collection tank in this system is selected by way of a three-way valve installed on the suction side of the pump. Pump operation is precisely that of a “start-stop” system with pressure and flow control. When the pressure drops below a certain threshold level, the pump starts up. Upon closing the tap, the pump stops. If the water runs out, the pump stops and signals a fault on the pump control panel. After a set time, the pump starts back up again automatically. If all the functions’ parameters have returned to normal, then the system runs normally. The system is also equipped with a special anti-odour anti-emptying siphon.

TECHNICAL SPECIFICATIONS

The system comprises a polyethilene (PE) console and an ACTIVE EI 30/50M electric centrifugal pump. The kit also includes a wall mount bracket and a water level sensor with 20 metres of cable.

MATERIALS

N°	PARTS	MATERIALS
1	PUMP CONTROL PANEL	SEE ACTIVE SYSTEM
2	PRESSURISED WATER OUTLET	PA 6.6 + 30% F.V.
3	RAINWATER SUCTION	STEEL HOSE
4	3-WAY VALVE	VALVE BODY: BRASS RETURN SPRINGS: STEEL MOTOR COVER: SELF-EXTINGUISHING ABS
5	RAINWATER COLLECTION TANK	PE
6	OVERFLOW DRAIN SIPHON	PP HOMOPOLYMER
7	PUMP	SEE EUROINOX
8	MAINS WATER INLET	STEEL HOSE
9	PUMP LOAD PLUG	PPE / O-R IN NBR

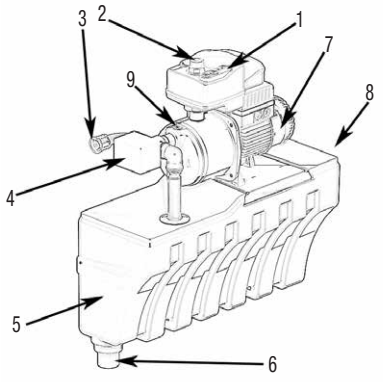

INSTALLATION DIAGRAM

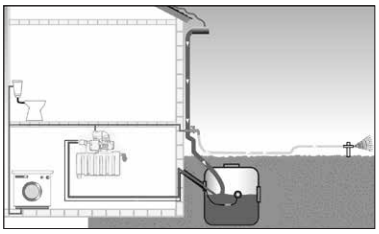

CONTROL PANEL

PERFORMANCE RANGE

The performance curves are based on kinematic viscosity values = 1 mm²/s and density equivalent to 1000 kg/m³. Curve tolerance according to ISO 9906.

GRAPHIC SELECTION TABLE

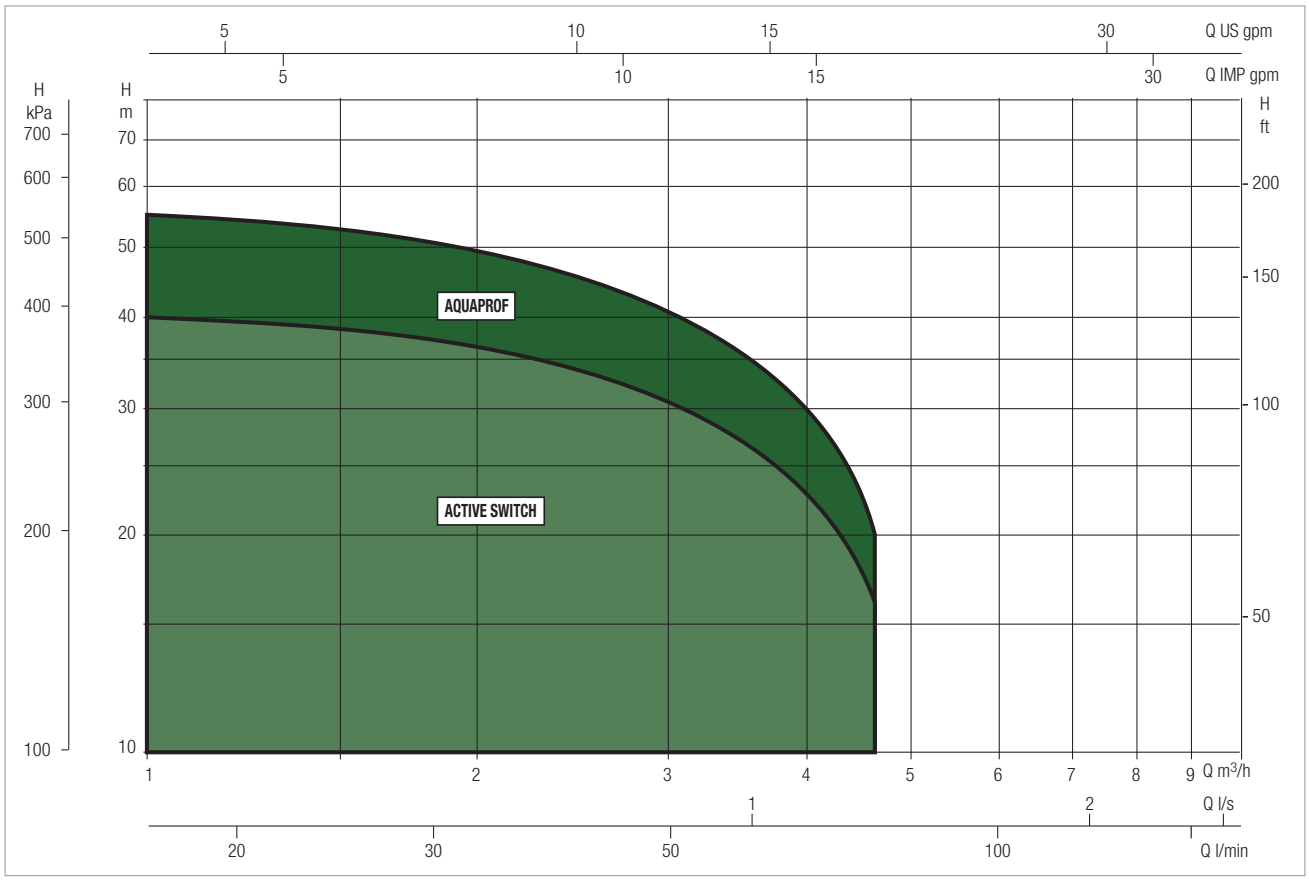

ACTIVE SWITCH SELECTION TABLE

MODEL	Q=m³/h	0	0,6	1,2	1,8	2,4	3,0	3,6	4,2	4,8
	Q=l/min	0	10	20	30	40	50	60	70	80
ACTIVE SWITCH 30/50 M	H (m)	42,2	40,2	38,2	36,2	33,8	30	24,8	19,5	14

ACTIVE SWITCH - PLANTS FOR USE OF RAINWATER

Liquid temperature range pumped: from +5 °C to +35 °C - Maximum ambient temperature: +40°C

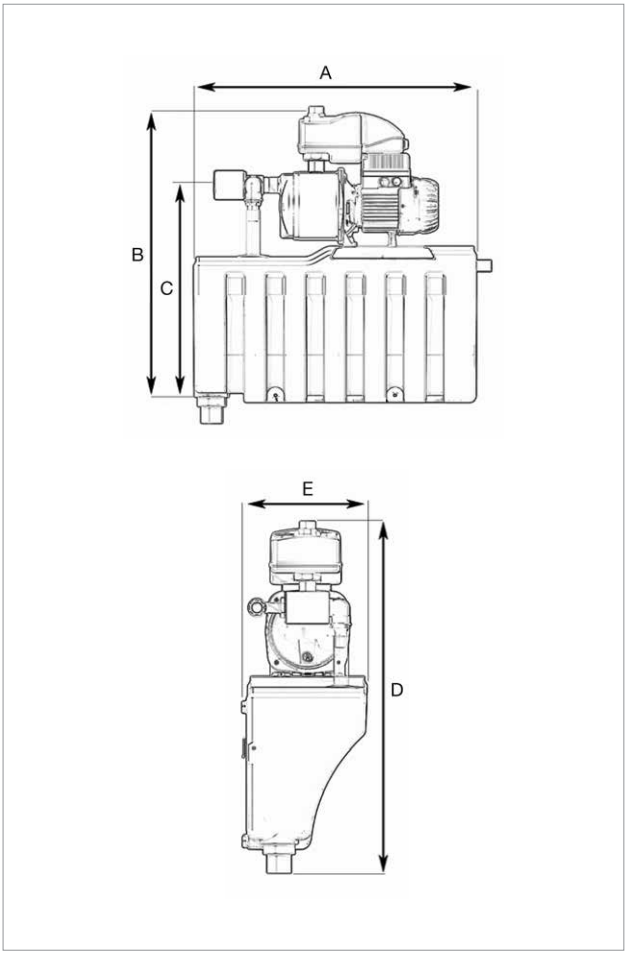

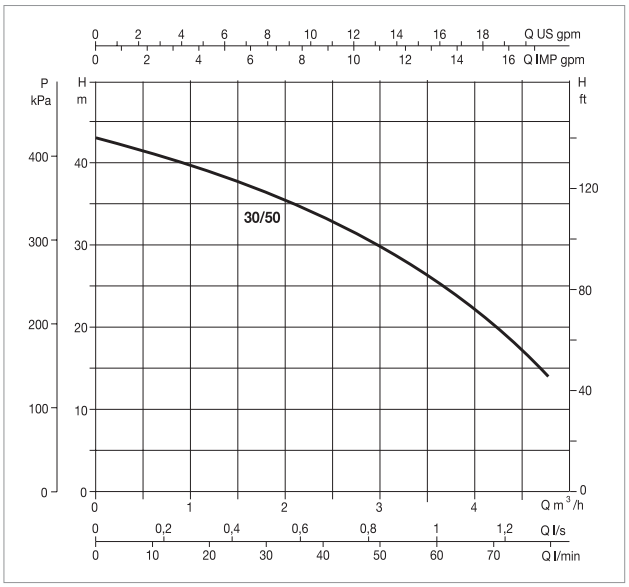

The performance curves are based on the kinematic viscosity values = 1 mm^2/s and density equivalent to 1000 kg/m^3. Curve tolerance according to ISO 9906.

MODEL	ELECTRICAL DATA						
	POWER SUPPLY 50 Hz	P1 MAX kW	P2 NOMINAL		In A	CAPACITOR	
			kW	HP		µF	Vc
ACTIVE SWITCH 30/50 M	1x220-240 V ~	0,880	0,55	0,75	3,9	12,5	450

MODEL	A	B	C	D	E	DNA GAS	DNM GAS	WEIGHT Kg	Q.TY X PALLET
ACTIVE SWITCH 30/50 M	650	666,5	501,5	731,5	260	1"	1"	18	4

AQUAPROF

PLANTS FOR USE OF RAINWATER

TECHNICAL DATA

Max flow rate (lt/min-m3/h): 85-5.1
Max head: 48 m
Max. Liquid temperature: From +5°C to +35°C
Max. system pressure: Max 6 bar
Max. mains pressure: Max 4 bar
Minimum mains flow rate: Min 10 lt/min
Maximum height of the highest point of use: 12 m
Power supply: Volt 230 Hz50
Maximum power absorbed: W 1000
Protection rating: IP 42
Ambient temperature: Min +5°C Max +40°C
Cabinet materials: PPE
Tank materials PE
Mains inlet pipe dimensions: 3/4”
Discharge pipe dimensions: 1”
Suction pipe dimensions: 1”
Overflow pipe dimensions: DN 50
Max Altitude: 1000 metres
Max power Pump No. 2 relay: 3’A_250Volt
Water type: ph 4-9
ON/OFF float version: ON/OFF float with 20 metre cable
version with electronic transducer water level indicator: electronic transducer (4-20 mA 8-28 V DC) w/20 metres of cable
Dry weight in Kg: 20
Operational weight in Kg: 35

APPLICATIONS

The AQUAPROF unit is used for rainwater management and distribution. The unit detects any faults in the water collection system, whether from rainwater or the mains and makes corrections to ensure proper operation of the plant (that is, it does not ever leave the connected utilities dry). It signals any faults and displays the problem detected. Generally, this system is reserved for irrigation, clothes washing, WC flushing and floor cleaning applications. The primary purpose of the AQUAPROF system is to give use of the rainwater priority over the use of the mains water. When there is not enough rainwater in the collection tank, the control unit switches over to the mains, ensuring that the connected use points are supplied (PLEASE, NOTE the water supplied by this system is not potable). The connection between the rainwater collection tank and the mains water collection tank in this system is selected by way of a three-way valve installed on the suction side of the pump. Pump operation is precisely that of a “start-stop” system with pressure and flow control. When the pressure drops below a certain threshold level, the pump starts up. Upon closing the tap, the pump stops. If the water runs out, the pump stops and signals a fault on the pump control panel. After a set time, the pump starts back up again automatically. If all the functions’ parameters have returned to normal, then the system runs normally. The system is also equipped with a special anti-odour anti-emptying siphon. Every 24 hours, the system checks the operation of the 3-way valves. Every week, the system completely changes the water contained in the mains water collection tank (the change is restricted by the user’s water use requirements).

TECHNICAL SPECIFICATIONS

The system comprises a polypropylene (PPE) foam console and either a EUROINOX 30/50M or a EUROINOX 40/50M electric centrifugal pump. The kit also includes a wall mount bracket and a water level sensor with 20 metres of cable for the AQUAPROF BASIC model ON/OFF version. While for the AQUAPROF TOP version there is an electronic transducer (with a 5 m full scale 4-20 mA 8-28 VDC). With tanks that are less than 2 metres deep, it is suggested that a dedicated sensore with a 2 - 2.5 metre resolution be purchased separately.

DAB PUMPS reserve the right to make modifications without prior notice

AQUAPROF

PLANTS FOR USE OF RAINWATER

PERFORMANCE RANGE

The performance curves are based on kinematic viscosity values = 1 mm²/s and density equivalent to 1000 kg/m³. Curve tolerance according to ISO 9906.

GRAPHIC SELECTION TABLE

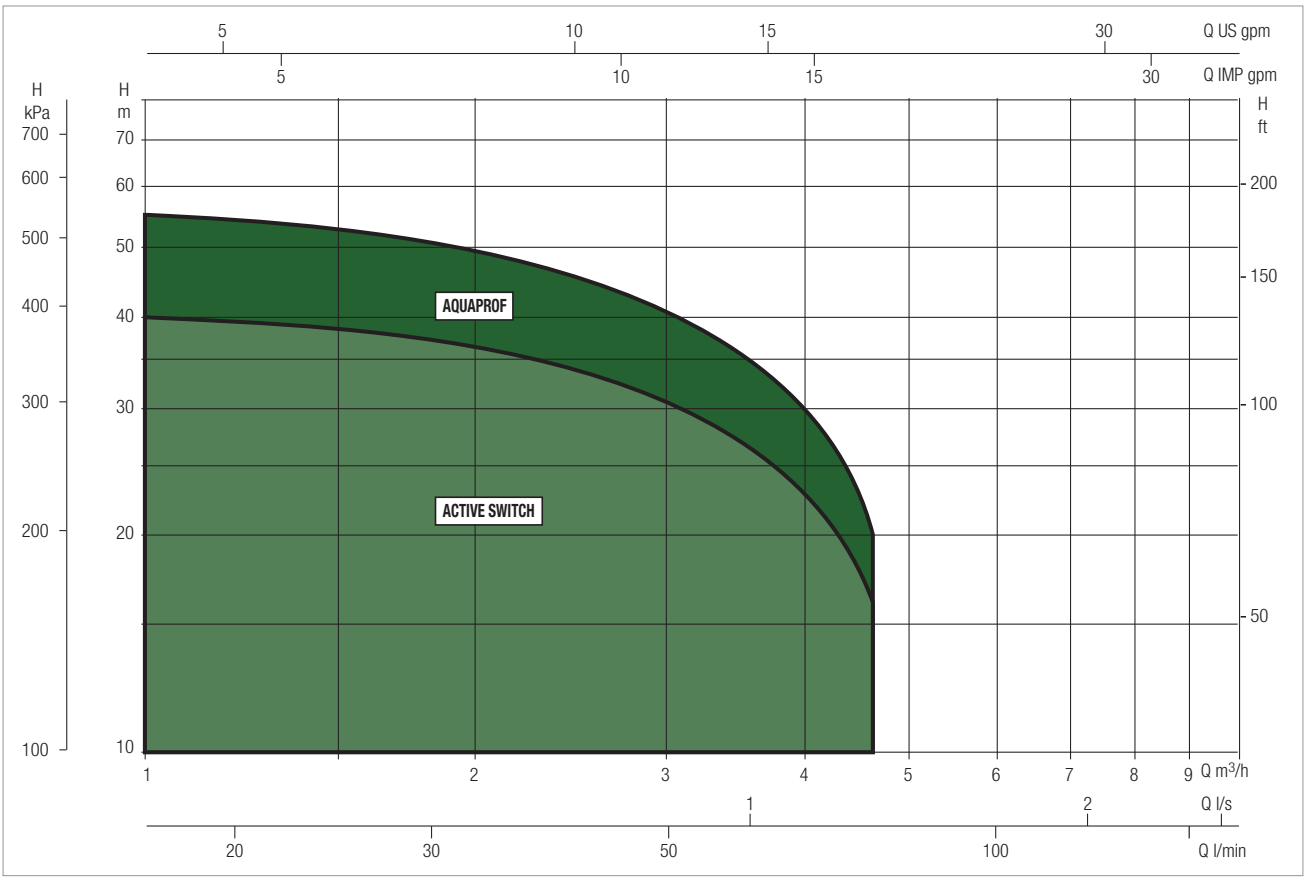

AQUAPROF SELECTION TABLE

MODEL	Q=m³/h	0	0,6	1,2	1,8	2,4	3,0	3,3	3,6	4,2	4,8
	Q=l/min	0	10	20	30	40	50	55	60	70	80
AQUAPROF BASIC 30/50	H (m)	42,2	40,2	38,2	36,2	33,8	30	27,5	24,8	19,5	14
AQUAPROF BASIC 40/50		57,7	55,3	52,8	50,1	47,1	42,7	39,5	35,8	28	19,2
AQUAPROF TOP 30/50		42,2	40,2	38,2	36,2	33,8	30	27,5	24,8	19,5	14
AQUAPROF TOP 40/50		57,7	55,3	52,8	50,1	47,1	42,7	39,5	35,8	28	19,2

MATERIALS

N°	PARTS	MATERIALS
1	MAINS WATER TANK	LLDPE
2	MAINS WATER INLET	METAL HOSE
3	CONTROL PANEL	-
4	3-WAY VALVE	VALVE BODY: BRASS RETURN SPRINGS: STEEL MOTOR COVER: SELF-EXTINGUISHING ABS
5	PUMP	EUROINOX
6	CONTROL SYSTEM HYDRAULIC PUMP	POM / NBR / STEEL
7	ANTI-DRIP EXPANSION TANK	DIAPHRAGM WITH HIGH CHLOROBUTYL CONTENT
8	WARM AIR VENT	-
9	RAINWATER SUCTION	BRASS
10	AIR INTAKE PUMP COOLING	-
11	PRESSURIZED WATER OUTLET	METAL HOSE
12	REAR CLADDING	PP FOAM
13	EMERGENCY OVERFLOW	-
14	PRESSURE GAUGE	-
15	HORIZONTAL OUTLET	BRASS
16	CHANNEL FOR HOSES AND ELECTRIC CABLES	-
17	FLOAT VALVE	PA 66 / STEEL / POLYSTYRENE
18	PUMP LOAD PLUG	PP / O-R IN NBR
19	CHECK VALVE	BRASS

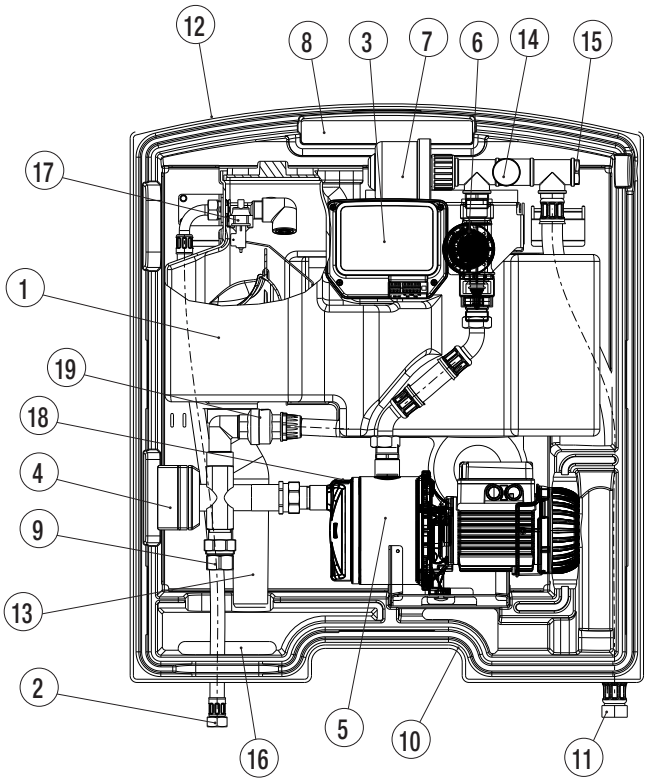

CONTROL PANEL

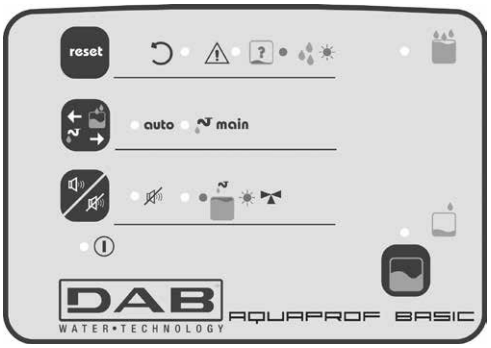

AQUAPROF BASIC

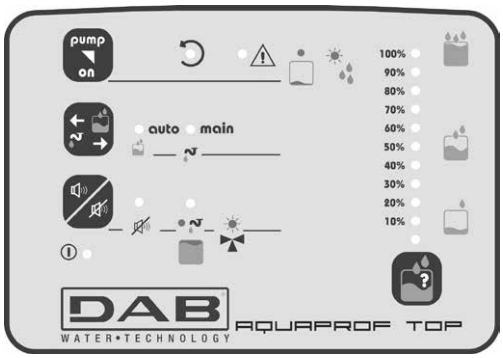

AQUAPROF TOP

INSTALLATION DIAGRAM AQUAPROF BASIC AND TOP

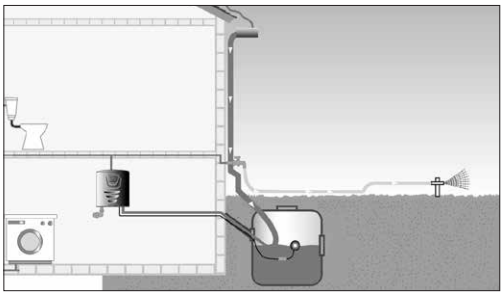

AQUAPROF - PLANTS FOR USE OF RAINWATER

Liquid temperature range pumped: from +5 °C to +35 °C - Maximum ambient temperature: +40°C

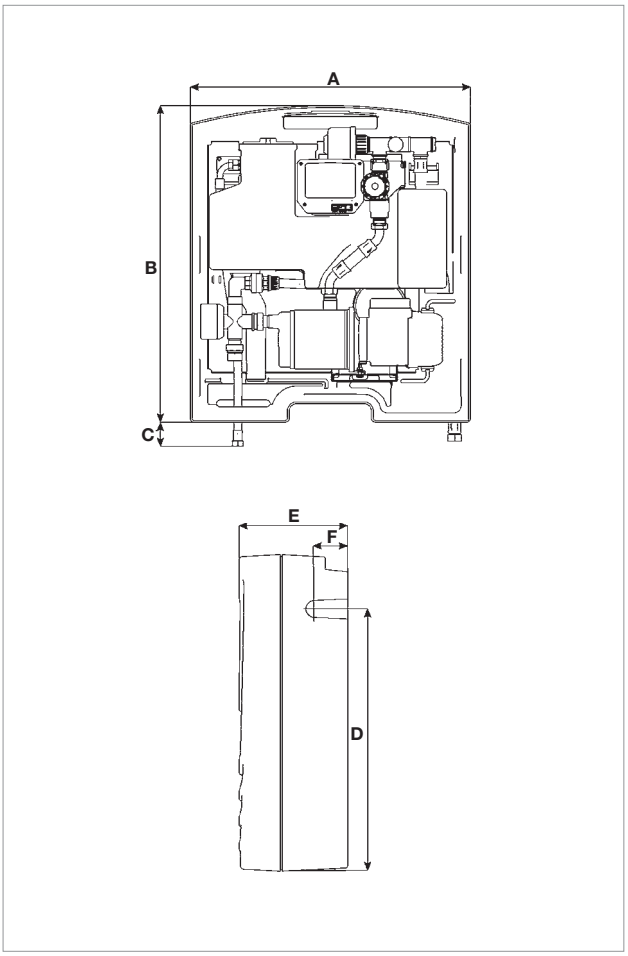

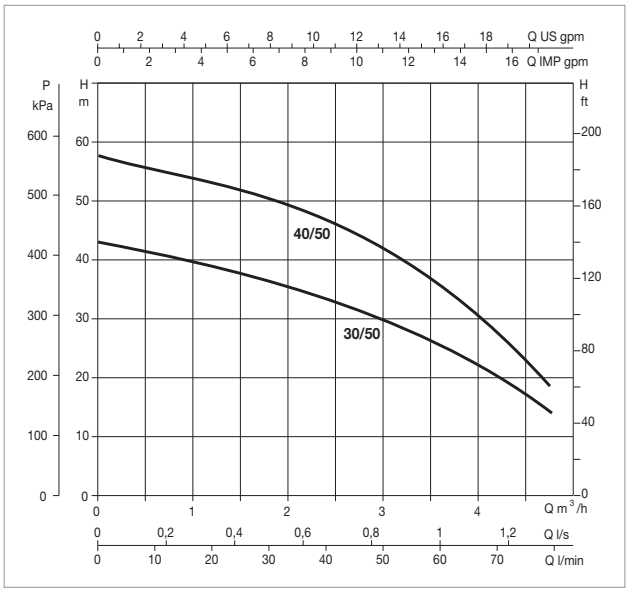

The performance curves are based on the kinematic viscosity values = 1 mm^2/s and density equivalent to 1000 kg/m^3. Curve tolerance according to ISO 9906.

MODEL	ELECTRICAL DATA							
	N° IMPELLER	POWER SUPPLY 50 Hz	P1 MAX KW	P2 NOMINAL		In A	CAPACITOR	
				kW	HP		µF	Vc
AQUAPROF BASIC 30/50	3	1x220-240 V ~	0,88	0,55	0,75	3,9	12,5	450
AQUAPROF BASIC 40/50	4	1x220-240 V ~	1,2	0,75	1	5,3	20	450
AQUAPROF TOP 30/50	3	1x220-240 V ~	0,88	0,55	0,75	3,9	12,5	450
AQUAPROF TOP 40/50	4	1x220-240 V ~	1,2	0,75	1	5,3	20	450

MODEL	A	B	C	D	E	F	GROSS WEIGHT Kg
AQUAPROF BASIC 30/50	750	850	50,5	747	290	148	28
AQUAPROF BASIC 40/50	750	850	50,5	747	290	148	32
AQUAPROF TOP 30/50	750	850	50,5	747	290	148	28
AQUAPROF TOP 40/50	750	850	50,5	747	290	148	32

ACCESSORIES

D+CONNECT	DESCRIPTION
FOR ESYBOX MINI³ AND ESYBOX	**DCONNECT BOX** The DConnect Box is suitable for remote control and management of large installations, and can connect up to eight DAB products. It can also be used on products that are already installed and only requires permanent Internet access at the system location. Monitoring is carried out via the DConnect app.

	DESCRIPTION
FOR ESYBOX MINI³ AND ESYBOX	**DCONNECT BOX 2** Thanks to DConnect Box 2 and the new App you can check the pump, set the starting and stopping parameters, view the details of alarms and monitor the status of the system directly on your smartphone. With DConnect Box 2, you'll be able to access Dab's cloud service.

	DESCRIPTION
FOR ESYBOX MINI³ AND ESYBOX	**KIT PIPE UNION 3PCS MF 1" WITH O-RING** Kit consisting of 2 x 3-piece unions, to facilitate the connection of Esybox and Esybox mini³ to the system
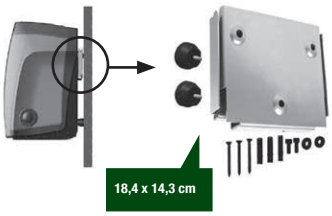 FOR ESYBOX MINI³ AND ESYBOX	**ESYWALL** Kit complete with brackets, screws, dowels and two accessories for absorption of vibrations.

KIT OUTDOOR	DESCRIPTION
FOR ESYBOX	**ESYCOVER + ESYGRID** **KIT OUTDOOR ESYBOX** Consisting of Esycover + Esygrid, which allows the installation of ESYBOX outside, protecting it from rain and the entry of foreign bodies. **Vertical installation only.**
FOR ESYBOX MINI ³	**ESYCOVER + ESYGRID** **KIT OUTDOOR ESYBOX MINI³** Consisting of Esycover + Esygrid, which allows the installation of ESYBOX MINI3 outside, protecting it from rain and the entry of foreign bodies. **Vertical installation only.**

	DESCRIPTION
	ESYDOCK Thanks to the 4 plumbing configuration possibilities offers an 'installation even more rapid, easy and flexible. It is complete with all the interfaces required for connecting to the system. It incorporates anti vibration feet to ensure the same quietness as Esybox.
	ESYTWIN Esytwin is the evolution of Esydock, of which maintains all the benefits, for the creation of two groups of pumps. Esytwin offers exceptional performance thanks to possibility of combined operation with a reduced size of 50% compared to any other equivalent traditional system.
	ESYTWIN DOUBLE CONNECTION KIT 2" T suction and delivery manifold connection kit for the connection of 2 Esytwin and the creation of boosters with up to 4 Esybox. Suction and delivery manifold, each one consisting of: no. 2 x 1"1/4 Nipples no. 2 x 1"1/4 female -and 2" male reductions no. 3 x 2" 3-piece connectors no. 1 x 2" female T connector

DELIVERY AND SUCTION FITTING 1" ¼

68 x 29 x 35 cm

INGOMBRO KIT
73 x 75 x 35 cm

	DESCRIPTION
166 x 87 x 60 cm *Esybox not included	**ESYTANK** Tank specially studied to better integrate with Esybox and equipped with: • Esydock (specially versioned) for quick connection. • suction hose with foot valve • filling valve from the water supply with float • Overflow • flow connection • preparation for ground mounting • inspection plug Capacity 500 L with the possibility of expansion on 3 sides.
	ESYTANK AUXILIARY CITERN The ESYTANK AUXILIARY CITERN is supplied without any fittings or the ESYDOCK. The tank has a modular design to couple easily with other ESYTANK units, making the system expandable to the necessary capacity. It can be connected on three sides (at side and rear) using the ESYTANK TANK COUPLING KIT
	ESYTANK COUPLING KIT The ESYTANK COUPLING KIT is composed of a PVC sleeve with gasket (D.160 mm L=150), two PVC aligning pipes (D.50mm x L=60) and a connecting ring nut for a 2-pump option. It allows the connection of several ESYTANK units or between ESYTANK and ESYTANK AUXILIARY CITERN.
	ESYTANK OPTIONAL DELIVERY KIT Composed of a 1” PP pipe. It allows an auxiliary delivery for single tank systems or with the COUPLING KIT it allows several ESYTANK and ESYBOX systems to be linked together and to create pressure boosting units with several pumps and tanks.

	DESCRIPTION
15 x 14,8 x 9,8 cm	**KIT ESYLINK *** Esylink with power supplier and electric box.

* Provided to be wired

EXPANSION VESSELS	DESCRIPTION
TANK WITH 5 YEARS OF GUARANTEE	2 LT. TANK 10 BAR V - G
	8 LT. TANK 10 BAR V - G
	18 LT. TANK 10 BAR V - G
	18 LT. TANK 16 BAR V - G
	20 LT. TANK 10 BAR H - G
	60 LT. TANK 10 BAR H - G
	100 LT. TANK 10 BAR V - G
	310 LT. TANK 10 BAR V - G
	450 LT. TANK 10 BAR V - G

100/310/450 LITER V

20/60 LITER H

2/8/18 LITERI V

ACQUABOX ASSEMBLY KIT	DESCRIPTION
	FLEXIBLE PIPE KIT AQUAJET RED VESSEL 20L
	FLEXIBLE PIPE KIT AQUAJETINOX RED VESSEL 20L
	FLEXIBLE PIPE KIT AQUAJET WHITE VESSEL 20L
	FLEXIBLE PIPE KIT AQUAJETINOX WHITE VESSEL 20L / RED VESSEL 60L

ACQUABOX ASSEMBLY KIT	DESCRIPTION
	DIAPH. FOR AQUABOX V 8 LT. BUTYL
	DIAPH. FOR AQUABOX "V" 20LT. - 16 BAR BUTYL
	DIAPH. FOR AQUABOX 19-20 LT. BUTYL

MANOMETERS	DESCRIPTION
	AXIAL PRESS. GAUGE 6 BAR D.50, 1/4" COUPL.
	AXIAL PRESS. GAUGE 12 BAR D.63, 1/4" COUPL.
	RADIAL PRESS. GAUGE 12 BAR D.63, 1/4" COUPL.

PRESSURE SWITCH	DESCRIPTION
	PRESS. SWITCH 6 BAR
	PRESS. SWITCH 6 BAR - XMP
	PRESS. SWITCH 12 BAR - XMP
	MIN. PRESS. SWITCH XMX A06L 1/4" F IP 43

CONNECTORS	DESCRIPTION
	3 - WAY BRASS CONNECTOR 1”
	5 - WAY BRASS CONNECTOR 1”

FOOT VALVES	DESCRIPTION
FOOT VALVE ¾”	FOOT VALVE ¾”
	FOOT VALVE 1”
	FOOT VALVE 1 ¼”

NON-RETURN VALVES	DESCRIPTION
NON-RETURN VALVE ¾”	NON-RETURN VALVE ¾”
	NON-RETURN VALVE ¾” 1”
	NON-RETURN VALVE ¾” 1 ¼”
	NON-RETURN VALVE ¾” 1 ½”

CONTROL-D	DESCRIPTION
	CONTROL-D 1,2 BAR 1.5 KW WITHOUT CABLE
	CONTROL-D 1,5 BAR 1.5 KW WITHOUT CABLE
	CONTROL-D 2,2 BAR 1.5 KW WITHOUT CABLE
	CONTROL-D 1,2 BAR 1.5 KW WITH CABLE
	CONTROL-D 1,5 BAR 1.5 KW WITH CABLE
	CONTROL-D 2,2 BAR 1.5 KW WITH CABLE
	CONTROL-D SET 1.5 KW WITHOUT CABLE
	CONTROL-D SET 1.5 KW WITH CABLE
	CONTROL -D GSET 1.5 KW WITHOUT CABLE

FLEXIBLE PIPE	DESCRIPTION
	ACTIVE FLEXIBLE PIPE FOR HYDRAULIC CONNECTION

TANK KIT BOOSTER SILENT	DESCRIPTION
	3-WAY FITTING
	STRAIGHT FITTING
	2 LT TANK: · Diaphragm high-grade butyl membrane · Patented stainless steel water connection · Epoxy primed paint finish · Single diaphragm design · Virgin polypropylene liner · Leak free o-ring sealed air valve cap

ELECTRONIC PROTECTION AND CONTROL PANEL

E.BOX

DATI TECNICI

Nominal tension of power supply:
e.box plus 1x 230 V / 3 x 230 V - 3 x 400 V (automatic selection)
e.box basic 1x 230 V
Frequency: 50 - 60 Hz
Maximum use of power:
e.box plus 5,5 kWatt + 5,5 kWatt
e.box basic 2,2 kWatt + 2,2 kWatt
Maximum use of current: 12 A + 12 A
Starting capacitor: KIT supplied as an accessor
Limits of use ambient temperature: -10° C + 40° C
Relative humidity to the air: 90% a 20° C
Max altitude max: 1000 s.l.m.
Degree of protection: IP 55
Display: 1.6" for e.box PLUS D and e.box BASIC D models
Reference standard for the construction of the panels EN 60335-1

APPLICATIONS

E.box is an electronic control panel that provides all the functions and protections required for the installation of a pumping set for draining, filling, and pressurisation purposes.

E.BOX PLUS is an electronic control panel for the protection and automatic operation of one or two submersible pumps or pressurizing both single-phase and three-phase, installed in domestic, civil and industrial environments.

E.BOX BASIC is an electronic control panel for the protection and automatic operation of one or two electronic submersible pumps or single-phase pressurization for domestic applications.

CONTROL PANEL CONSTRUCTION

Supplied in an IP 55 protection class self-extinguishing thermoplastic material box, the control panel protects the electric pumps from abnormal conditions such as: overload and overtemperature (with automatic reset), short circuit (with fuses - Plus model only), pump current surges (amperometric protection), abnormal voltage, dry run, quick starts, pressure sensor fault, or inconsistency of the external protection commands.

FRONT PANEL COMPONENTS

- General disconnector with padlockable door lock.
- AUT-O-MAN operation selection pushbuttons.
- Alarm RESET pushbutton.
- Operation, stop, alarm notification lamps.

PANEL INTERNAL COMPONENTS

- Electronic control card with protection fuses and contactors.
- Power input connection terminals, single phase (L-N in the Basic version), or three phase (L1-L2-L3 in the Plus version).
- Electric pump connection terminals, single phase (L-N in the BASIC version), or three phase (L1-L2-L3 in the PLUS version).
- Terminals for the connection of pressure switches, sensors, KK thermal protection, alarm notification N.O. contacts. Operation selection dip switch: level floats or sensor, tank filling and emptying, operation with one or two pumps.

SOFTWARE

For the models with display, the software
- During the first installation, provides step by step guidance in the selection of the correct settings based on the actual application.
- Makes the status of the control panel and the pumps clearly and immediately visible.
- When compared to the previous model, makes it easier to change the level settings, as operation of the control panel dip switch is no longer required.

ELECTRONIC PROTECTION AND CONTROL PANEL

E.BOX

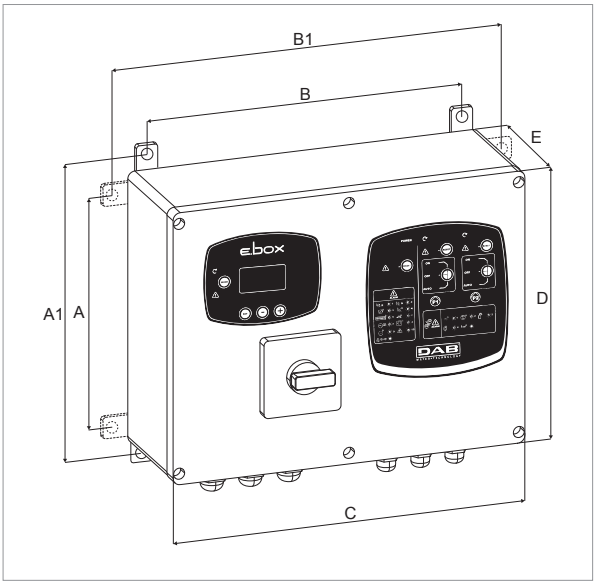

MODEL	A	A1	B	B1	C	D	E	PACKING DIMENSIONS			WEIGHT Kg
								L/A	L/B	H	
E.BOX BASIC 230/50-60	212	265	282	337	320	260	120	250	430	310	4
E.BOX PLUS 230-400V/50-60	212	265	282	337	320	260	120	250	430	310	5
E.BOX BASIC D 230/50-60	212	265	282	337	320	260	120	250	430	310	4
E.BOX PLUS D 230-400V/50-60	212	265	282	337	320	260	120	250	430	310	5

MODEL	ELECTRICAL DATA					
	POWER SUPPLY 50 HZ	STARTING	P2 NOMINAL		MAX CURRENT A	DISPLAY
			kW x2	HP x2		
E.BOX BASIC 230/50-60	1X230 V~	diretto	2,2	3	12+12	
E.BOX PLUS 230-400V/50-60	1X230 V~	diretto	2,2	3	12+12	
	3X230 V~		3	4		
	3X400 V~		5,5	7,5		
E.BOX BASIC D 230/50-60	1X230 V~	diretto	2,2	3	12+12	•
E.BOX PLUS D 230-400V/50-60	1X230 V~	diretto	2,2	3	12+12	•
	3X230 V~		3	4		
	3X400 V~		5,5	7,5		

ACCESSORIES

	FLOAT	5 meters
		10 meters
		15 meters
		20 meters
	BULB FLOAT	10 meters
		20 meters
	LEVEL TRANSDUCER 0-5 mt. - 20 mt. CABLE FOR E.BOX CONTROL PANEL	

	FLASCHING
	CAPACITOR KIT 40UF
	CAPACITOR KIT 30UF
	CAPACITOR KIT 20UF

ACCESSORIES

NOTES

DAB PUMPS reserve the right to make modifications without prior notice

TECHNICAL APPENDIX

GENERAL INFORMATION

BASIC TERMS USED WITH PUMPS

Below, in current language, there are listed the meanings of the basic terms used when talking about hydraulic pumps. The figures will be expressed in technical units of measure, referring to the conversion table in International and English measurement units.

HEAD

Head refers to height, difference in level or height. When talking about a pump with a capacity of Q litres per second and a head of 30 metres, this means that the pump has the capacity to lift Q litres 30 metres (that is surpass a difference of height of 30 metres) per second. For a given pump, the head is linked to its manufacturing characteristics such as external diameter of the impeller and rotation speed, while it is independent of the liquid pumped. This means that the pump is capable of raising Q litres per second equally, of water, petrol or mercury; only the power of the motor will be different for the three substances.

SPECIFIC WEIGHT OF A LIQUID OR FLUID

Specific weight of a liquid is the unit volume of that liquid/fluid. Specific weight is usually expressed in Kg/dm^3 or Kg/l given that one dm^3 is equal to 1 litre.

PRESSURE

By pressure means the weight per unit of surface (eg, Kg/cm^2); this is a term that should not be confused with head. Indeed, in the case of fluids, the pressure that a fluid exerts on a surface is given by the product of the head (or height) of the fluid itself multiplied by its specific weight. Therefore, the thickness of several Km of air on the earth's surface produces a pressure of about 1 Kg/cm^2 (equal to about 1 atmosphere) at the earth's surface. If the same thickness were to be of water instead of air, the pressure at the earth's surface would be between 700-800 greater. This is because the specific weight of water is between 700-800 times greater than that of air.
Keeping in mind that a 10 metre high column of water equals about 1 Kg/cm^2, based on what was said, by installing a pressure gauge on the discharge outlet of a pump, the following pressure increases would be measured:

a) with petrol	(specific weight 00.7 Kg/dm^3)	= 00.7 x 0.001 x 30 x 100 = 02.1 Kg/cm^2
a) with water	(specific weight 01.0 Kg/dm^3)	= 00.1 x 0.001 x 30 x 100 = 03.0 Kg/cm^2
a) with mercury	(specific weight 13.6 Kg/dm^3)	= 13.6 x 0.001 x 30 x 100 = 40.8 Kg/cm^2

FLOW RATE

What is meant by flow rate is the quanitity of liquid or fluid that passes over a surface, such as the discharge outlet of a pump, or the cross section of a pipe, etc., over a unit of time.
Depending on the quantities used, there may be litres per minute, (l/min), litres per second (l/s) cubic metres per hour (m^3/h) etc.
It is necessary to understand that there is a perfect analogy between electricity and hydraulics. One merely needs to recall that hydraulic head is equal to the quantities referring to the difference in potential or voltage in elctronics and the hydraulic flow rate is similar to the intensity of the current or amperage. Even the behaviour of these quantities is identical. Actually, a wire or cable that is too thin does not aid current flow in the same manner that a pipe that has too small a dimater does not favour the flow of a liquid. Just like the flow of electrical current through a wire to a cable requires a difference in voltage, in the same manner the flow rate of a liquid or fluid through a pipe requires a certain amount of head.
There will never be movement of a liquid between two points in a perfectly horizontal pipe with both having the liquid at the same head. This is linked to the fact that, since the cable gives a certain resistance to the flow of the electrical current (electrical resisistance), so does the pipe offer a certain amount of resisitance to the flow of the fluid. This resistance depends on the quality of the pipe (material, shape, presence of scale, etc.), its cross section or rather the speed that the fluid flows through the pipe. This resistance is called Head Loss.

HEAD LOSS

What is meant by head loss is that part of the head, possessed by the liquid, lost in the flow through a tube or a valve or filter, etc. This head loss cannot be recovered because it is a loss due to friction. Returning to the analogy between electrical and hydraulic phenomena, since the losses in a cable become greater with more electric current flowing through it, head loss is greater as the speed of the fluid increases, and therefore as the diameter of the pipe decreases or how much the valve creates a bottleneck or how fouled the filter.

PUMP

This is a machine that gives a liquid going through it a certain head. This head may be used to take the liquid to a higher level or to travel a certain distance either in a pipe or in the air. The characteristics of a pipe are

a) **flow rate** (the quantity of liquid moved over a period of time)
b) **head** (the height that the machine can raise the flow rate)

Depending on the ratio between flow rate and head there may be:

a) pumps with large head and small flow rates (piston pumps, rotating pumps, small centrifugal pumps)
b) pumps with medium head and flow rates (centrifugal pumps in general)
c) pumps with large flow rates and small head (axial flow centrifugal pumps and propeller pumps)

DAB PUMPS reserve the right to make modifications without prior notice

Centrifugal pumps, axial flow centrifugal pumps and propeller pumps are rotary driven and their speed is universally measured in revolutions per minute RPM. For these machines working at a given speed, for each flow rate value there is only one head value. This means that if this type of pump performance is to be increased or decreased its operational speed must be increased or decreased. Essentially, the liquid that flows through a pump is given energy linked to the head and the speed of the same liquid. This energy provided in a unit of time is called the power output.

POWER OUTPUT

What is meant by power output is the power supplied by the same pump. The level of this power depends on three quanities: flow rate, the head and the specific weight of the liquid pumped. The larger these three factors are, the greater the power ouput of the pump will be. For example, a pump dispensing petrol does less work than one dispensing sulphuric acid, precisely because the specific weights or densities of the two liquids are different.
The pump the liquid, the pump must be turned by a motor, which is either electric or internal combustion. Electric motors use electric power. I nternal combustion engines use petroleum distillates or gas. The power needed by the pump to work is called the absorbed power.

CALCULATION OF THE POWER OUTPUT

Usually the output power by a pum is expressed in kW or HP, indicating:
Q = flow rate
H = the head in a column of liquid (m.l.c. [meter liquid column])
γ = specific weight (density)

Power output (P3) is given by:

$$P3 = \frac{\gamma\,(kg/dm^3) \times Q\,(l/s) \times H\,(m.c.l.)}{75} \quad \text{in HP}$$

$$P3 = \frac{\gamma\,(kg/dm^3) \times Q\,(m^3/h) \times H\,(m.c.l.)}{270} \quad \text{in HP}$$

$$P3 = \frac{\gamma\,(kg/dm^3) \times Q\,(l/s) \times H\,(m.c.l.)}{102} \quad \text{in kW}$$

$$P3 = \frac{\gamma\,(kg/dm^3) \times Q\,(l/min) \times H\,(m.c.l.)}{4500} \quad \text{in HP}$$

$$P3 = \frac{\gamma\,(kg/dm^3) \times Q\,(m^3/h) \times H\,(m.c.l.)}{367} \quad \text{in kW}$$

$$P3 = \frac{\gamma\,(kg/dm^3) \times Q\,(l/min) \times H\,(m.c.l.)}{6120} \quad \text{in kW}$$

POWER ABSORBED

Absorbed power means the power used by the motor to give the liquid what was called 'power output' above.
Not all absorbed power becomes power output because a part of it is dissipated in friction and another part, even more significant, is lost inside of the pump itself due to hydraulic leaks. Therefore, clearly the power output will always be less than that absorbed and their ratio shall always be less than 1. This number is called efficiency.

EFFICIENCY

Pump efficiency is obtained by dividing the power ouput by the absorbed power and commonly expressed as a percentage. For example, pump efficiency of 75% means that only 75% of the power absorbed becomes power output, with the remaining 25% being lost as it is dissipated in friction. Clearly, the higher the efficiency of the pump then the less power absorbed is lost. Then if one considers that the cost of the power is that concerning the power absorbed, then it is immediately clear how important efficiency is. Looking at two pumps with the same power output of 1 HP with an efficiency of 50% for one and 60% for the other, it may be deduced that the first needs 2 Hp to supply 1 HP while for the second only 1.67 HP is needed. This means that pump efficiency expresses the quality of the pump and its savings in terms of operational costs better than almost any other parameter.

EFFICIENCY CALCULATION

P_1: is the power absorbed by the motor in kW (generally indicated by a watt meter)
P_2: is the ouput power by the motor in kW. This is measured at the brake (practically, this is the power absorbed by the pump)
P_3: is the power absorbed by the pump in kW

Motor efficiency $\eta = \frac{P_2}{P_1}$

Motor efficiency $\eta = \frac{P_3}{P_2}$

Motor efficiency $\eta = \frac{P_3}{P_1}$

PUMP HEAD AND ITS MEASUREMENT

What is meant by a pump's head is always and only the differential given by the same pump, which is generally expressed in metres. To measure the head of a surface pump, it is necessary to measure, during operation, the value of the head at the outlet, making sure to refer the values of the readings to a single level, called the plane of reference. Now, depending on the installation there may one of two cases:

1) the value read at the suction inlet is negative (i.e., less than zero on the presure gauge). this is the case when the level of the liquid drawn is lower than the suction inlet.

2) the value read at the suction inlet is positive (ie, greater than zero on the presure gauge). this is the case when the level of the liquid drawn is higher than the suction inlet (submerged operation).

In the first case, the pump head is given by the sum of the two readings. In the second case it is given by the head value at the discharge outlet less the value at the suction inlet.
Then, it is necessary to check that the values read at the pump inlet and outlet refer to the same diameter, so that the different speed values are not distorted in the measurement section. Any correction shall be made through the calculation of the dynamic head, which is that part of the head linked to the speed of the liquid, ie, that part of the head that the liquid possesses in the measurement section because it is moving. The dynamic Hd hear, expressed in metres, is given by the following formula:

$$Hd = \frac{v^2}{2g}$$

where: v = speed of the fluid at the point of measurement, expressed in m/s
g = acceleration of gravity (9.81) expressed in m/s2
2g = 2 x 9.81 = 19.62 m/s2

The head correction term is given by the difference between the dynamic head at the discharge outlet and the the dynamic head at the suction inlet. Clearly if the measurements upstream and downstream of the pump are taken on pipes of equal diameter, ie, with the liquid moving at the same speed, the correction term will be zero.

To measure the head of a pump with the impeller submerged it is sufficient to measure, during the pump operation, the head at the discharge outlet. In this case, the pump head is given by the sum of the vlaue read with the dynamic head.
(still at the discharge outlet) and with the difference of the level of the free surface of the liquid drawn and the pressure gauge.

PUMP PERFORMANCE AT DIFFERENT RPM

The pump's revolutions **n** notably influences its performance. Not considering any cavitation phenomena, the law of similars applied, expressed:

$$Q_x = Q \times \frac{n_x}{n} \qquad H_x = H \times \left(\frac{n_x}{n}\right)^2 \qquad P_{2\text{-}x} = P_2 \times \left(\frac{n_x}{n}\right)^3$$

For example, doubling the number of revolutions (**n**x) one gets:
Q_x = the value of the flow rate doubles
Q_x = the value of the head quadruples
$P_{2\text{-}x}$ = the Power absorbed by Pump increases 8 times

Q - H - P2 are values referring to speed **n**
Q_x - H_x - $P_{2\text{-}x}$ are values referring to speed **nx**.

DAB PUMPS reserve the right to make modifications without prior notice

NOTIONS ON ELECTRIC PUMP MOTORS

SYMBOL KEY
P_1 = POWER ABSORBED BY THE MOTOR IN KW
P_2 = POWER OUTPUT BY THE MOTOR IN KW OR HP
V ~ = AC VOLTAGE POWER SUPPLY
Hz = FREQUENCY IN PERIODS/DEPENDIMNG ON THE POWER SUPPLY VOLTAGE
I = CURRENT ABSORBED BY THE MOTOR IN AMPERES
cosϕ = POWER FACTOR
$n^{1/min}$ = ROTATION SPEED IN RPM
η = EFFICIENCY (RATIO OF POWER OUTPUT AND POWER ABSORBED P2/P1)
p = NUMBER OF POLES ON THE MOTOR
Cn = MOTOR RATED TORQUE

ROTATION SPEED W/NO LOAD

The rotation speed of single phase or three phase induction electric motors w/no load is calculated as follows:

$$n^{1/min} = \frac{120 \times Hz}{p}$$

Rotation speed w/no load $n^{1/min}$

FREQUENZCY HZ	2 POLES	4 POLES
50	3000	1500
60	3600	1800

The speed at full load is 2% to 7% less than w/no load (2% ÷ 7% slippage).

CURRENT ABSORBED

Single phase: $I = \frac{1000 \times P_2\,(kW)}{V \times \cos\phi \times \eta}$ or: $I = \frac{736 \times P_2\,(HP)}{V \times \cos\phi \times \eta}$

Three phase: $I = \frac{1000 \times P_2\,(kW)}{1.73 \times V \times \cos\phi \times \eta}$ or: $I = \frac{736 \times P_2\,(HP)}{1.73 \times V \times \cos\phi \times \eta}$

POWER ABSORBED

Single phase: $P_1\,(kW) = \frac{V \times I \times \cos\phi}{1000}$

Three-phase: $P_1\,(kW) = \frac{1.73 \times V \times I \times \cos\phi}{1000}$

POWER OUTPUT AT MOTOR SHAFT

Single phase: $P_2\,(kW) = \frac{V \times I \times \cos\phi \times \eta}{1000}$ or: $P_2\,(HP) = \frac{V \times I \times \cos\phi \times \eta}{736}$

Three-phase: $P_2\,(kW) = \frac{1.73 \times V \times I \times \cos\phi \times \eta}{1000}$ or: $P_2\,(HP) = \frac{1.73 \times V \times I \times \cos\phi \times \eta}{736}$

EFFICIENCY

$$\eta = \frac{P_2\,(kW)}{P_1\,(kW)}$$

POWER FACTOR

Single phase: $\cos\phi = \dfrac{P_2\,(kW) \times 1000}{V \times I \times \eta}$ or: $\cos\phi = \dfrac{P_1\,(kW) \times 1000}{V \times I}$

Three-phase: $\cos\phi = \dfrac{P_2\,(kW) \times 1000}{1.73 \times V \times I \times \eta}$ or: $\cos\phi = \dfrac{P_1\,(kW) \times 1000}{1.73 \times V \times I}$

RATED TORQUE

$Cn = \dfrac{P_2\,(kW) \times 1000}{1.027 \times \mathbf{n}^{1/min}}$ in Kg

$Cn = \dfrac{P_2\,(HP) \times 736}{1.027 \times \mathbf{n}^{1/min}}$ in Kg

$Cn = \dfrac{702 \times HP}{\mathbf{n}^{1/min}}$ in Deca Newton Meter

RELATION BETWEEN KW AND HP

1 HP = 0.736 kW 1 kW = 1.36 HP $\dfrac{HP}{1.36} = kW$ kW x 1.36 = HP

PEAK CURRENT (IP)

Peak current at start up is greater than rated current by 4 to 8 volts depending on the power of the motor

Isp = In x 4 ÷ 8

NOTES ON ELECTRICAL CAPACITORS

The approximate current absorbed by a capacitor is:

$$I = \frac{6.28 \times F \times C \times V}{1{,}000{,}000}$$

Where:

I	=	current in amperes absorbed by a capacitor
F	=	frequency in Hz from the rated voltage
C	=	capacitor capacity in µF
V	=	rated voltage

Example:
The approximate current absorbed by a 14 µF capacitor connected to 220 Volt - 50 Hz power, will be:

$$I = \frac{6.28 \times 50 \times 14 \times 220}{1{,}000{,}000} = 0.96 \text{ Ampere}$$

The approximate capacity of a capacitor is determined:

$$C = \frac{I}{6.28 \times F \times V} \times 1{,}000{,}000$$

Example:
The capacity of a capacitor that absorbs 1.4 Amperes connected to 220 Volt - 50 Hz power, will be:

$$C = \frac{1.4}{6.28 \times 50 \times 220} \times 1{,}000{,}000 = 20.2\ \mu F$$

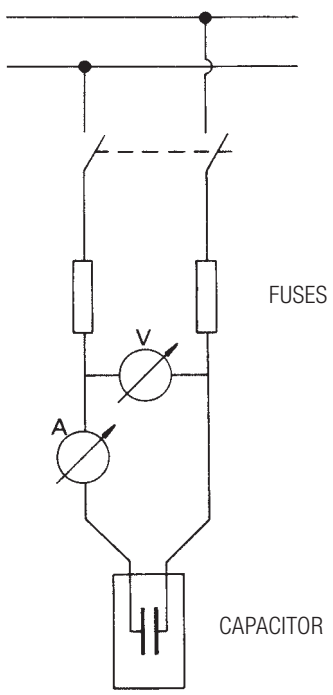

STAR-DELTA STARTER

The motor normally connected to delta Δ is connected to the network by a star connection. The current and the starting torque are reduced by 1/3 of the level it would have been with just the delta Δ connection.

PROTECTION

It is suggested that the motors in the network are connected to thermal magnetic circuit breakers in a fuse circuit pursuant to the standards of that country.

LOSS OF HEAD AND SPEED TABLE

To calculate the **head losses** accurately **and the speed** use this table:

FLOW RATE			NEW GALVANIZED PIPES									
			NOMINAL DIAMETERS: INCHES AND mm									
l/s	l/min	m³/h	1/2"	3/4"	1"	1"1/4	1"1/2	2"	2"1/2	3"	3"1/2	4"
			15.75	21.25	27	35.75	41.25	52.5	68	80.25	92.5	105
0.17	10	0.6	0.856	0.47	0.291							
			9.01	20.9	0.65				HAZEN WILLIAMS FORMULA (UNI 9489 13.3.3.6)			
0.25	15	0.9	1.284	0.705	0.4387	0.249						
			19.07	4.43	1.38	0.35						
0.33	20	1.2	1.712	0.94	0.582	0.332	0.25					
			32.47	7.55	2.35	0.6	0.3					
0.42	25	1.5	2.14	1.175	0.728	0.415	0.31					
			49.06	11.41	3.55	0.91	0.45					
0.5	30	1.8	2.568	1.411	0.874	0.498	0.37	0.23				
			68.74	15.98	4.98	1.27	0.63	0.2				
0.58	35	2.1	2.996	1.646	1.019	0.581	0.44	0.27				
			91.42	21.26	6.62	1.69	0.84	0.26				
0.67	40	2.4		1.881	1.165	0.664	0.5	0.31				
				27.22	8.48	2.16	1.08	0.33				
0.83	50	3		2.351	1.456	0.831	0.62	0.39	0.23			
				41.13	12.81	3.27	1.63	0.5	0.14			
1	60	3.6		2.821	1.747	0.997	0.75	0.46	0.28			
				57.63	17.95	4.58	2.28	0.7	0.2			
1.17	70	4.2		3.291	2.039	1.163	0.87	0.54	0.32	0.23		
				76.64	23.88	6.08	3.03	0.94	0.27	0.12		
1.33	80	4.8			2.33	1.329	1	0.62	0.37	0.26		
					30.57	7.79	3.88	1.2	34	0.15		
1.5	90	5.4			2.621	1.495	1.12	0.69	0.41	0.3		
					38.01	9.69	4.83	1.49	0.42	0.19		
1.67	100	6			2.912	1.661	1.25	0.77	0.46	0.33	0.25	
					46.19	11.77	5.86	1.81	0.51	0.23	0.11	
2.08	125	7.5			3.641	2.077	1.56	0.96	0.57	0.41	0.31	0.24
					69.79	17.79	8.86	2.74	0.78	0.35	0.17	0.09
2.5	150	9				2.492	1.87	1.16	0.69	0.49	0.37	0.29
						24.92	12.41	3.84	1.09	0.49	0.24	0.13
2.92	175	10.5				2.907	2.18	1.35	0.8	0.58	0.43	0.34
						33.15	16.51	5.1	1.45	0.65	0.32	0.17

Numbers in white: Head loss in m. for each 100 m. of piping

Numbers in green: Water speed in m/sec

The table refers to galvanized pipe.

For different materials multiply by:
- 0.6 for PVC pipe
- 0.7 for aluminium pipe
- 0.8 for laminated steel and stainless pipe

LOSS OF HEAD AND SPEED TABLE

To calculate the **head losses** accurately **and the speed** use this table:

FLOW RATE			NEW GALVANIZED PIPES									
			NOMINAL DIAMETERS: INCHES AND MM									
l/s	l/min	m³/h	1"1/4	1"1/2	2"	2"1/2	3"	3"1/2	4"	5"	6"	8"
			35.75	41.25	52.5	68	80.25	92.5	105	130	155	206
3.33	200	12	3.322	2.5	1.54	0.92	0.66	0.5	0.39	0.25		
			42.43	21.14	6.53	1.85	0.83	0.41	**0.22**	**0.08**		
4.17	250	15	4.156	3.12	1.93	1.15	0.82	0.62	**0.48**	**0.31**		
			64.12	31.94	9.87	2.8	1.25	1.63	**0.34**	**0.12**		
5	300	18		3.74	2.31	1.38	0.99	0.74	**0.58**	**0.38**	**0.27**	
				44.75	13.83	3.92	1.75	0.88	0.47	0.17	0.07	
6.67	400	24		4.99	3.08	1.84	1.32	0.99	0.77	0.5	0.35	
				76.2	23.55	6.68	2.98	1.49	0.8	0.28	0.12	
8.33	500	30			3.85	2.3	1.65	1.24	0.96	0.63	0.44	
					35.58	10.09	4.51	2.26	1.22	0.43	0.18	
10	600	36			4.62	2.75	1.98	1.49	1.16	0.75	0.53	0.3
					49.85	14.14	6.31	3.16	1.7	0.6	0.26	0.06
11.67	700	42				3.21	2.31	1.74	1.35	0.88	0.62	0.35
						18.81	8.4	4.2	2.27	0.8	0.34	0.09
13.33	800	48				3.67	2.64	1.99	1.54	1.01	0.71	0.4
						24.08	10.75	5.38	2.9	1.03	0.44	0.11
15	900	54				4.13	2.97	2.23	1.73	1.13	0.8	0.45
						29.94	13.37	6.69	3.61	1.28	0.54	0.14
16.67	1000	60				4.59	3.3	2.48	1.93	1.26	0.88	0.5
						36.39	16.24	8.13	4.39	1.55	0.66	0.16
20.83	1250	75					4.12	3.1	2.41	1.57	1.1	0.63
							24.54	12.29	6.63	2.34	0.99	0.25
25	1500	90					4.95	3.72	2.89	1.88	1.33	0.75
							34.39	17.22	9.29	3.28	1.39	0.35
29.17	1750	105						4.34	3.37	2.2	1.55	0.88
								22.9	12.35	4.37	1.85	0.46
33.33	2000	120						4.96	3.85	2.5	1.77	1
								29.31	15.81	5.59	2.37	0.59
41.67	2500	150							4.81	3.14	2.21	1.25
									23.89	8.44	3.59	0.9
50	3000	180		HAZEN WILLIAMS FORMULA (UNI 9489 13.3.3.6)						3.77	2.65	1.5
										11.83	5.02	1.26
66.67	4000	240								5.03	3.53	2
										20.15	8.55	2.14
83.33	5000	300									4.42	2.5
											12.93	3.23

Numbers in white: Head loss in m. for each 100 m. of piping

Numbers in green: Water speed in m/sec

The table refers to galvanized pipe.

For different materials multiply by:
- 0.6 for PVC pipe
- 0.7 for aluminium pipe
- 0.8 for laminated steel and stainless pipe

HEAD LOSSES
in centimetres water column in bends, shutters and valves

WATER SPEED IN m/sec	SHARP BENDS					CURVE NORMAL BENDS					NORMAL SHUTTERS	FOOT VALVES	CHECK VALVES	LOSS OF ENERGY AT THE OUTLET OF DRAIN PIPES $V^2/2G$
						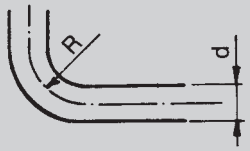								
	$\alpha = 30°$	$\alpha = 40°$	$\alpha = 60°$	$\alpha = 80°$	$\alpha = 90°$	$\frac{d}{R} = 0.4$	$\frac{d}{R} = 0.6$	$\frac{d}{R} = 0.8$	$\frac{d}{R} = 1$	$\frac{d}{R} = 1.5$				
0.10	0.03	0.04	0.05	0.07	008	0.07	0.08	0.01	0.0155	0.027	0.03	30	30	0.05
0.15	0.06	0.73	0.1	0.14	0.17	0.016	0.019	0.024	0.033	0.06	0.033	31	31	0.12
0.2	0.11	0.13	0.18	0.26	0.31	0.028	0.033	0.04	0.059	0.11	0.058	31	31	0.21
0.25	0.17	0.21	0.28	0.4	0.48	0.044	0.052	0.063	0.091	0.17	0.09	31	31	0.32
0.3	0.25	0.3	0.41	0.6	0.7	0.063	0.074	0.09	0.13	0.25	0.13	31	31	0.46
0.35	0.33	0.4	0.54	0.8	0.93	0.085	0.10	0.12	0.18	0.33	0.18	31	31	0.62
0.14	0.43	0.52	0.71	1.0	1.2	0.11	0.13	0.16	0.23	0.43	0.23	32	31	0.82
0.5	0.67	0.81	1.1	1.6	1.9	0.18	0.21	0.26	0.37	0.67	0.37	33	32	1.27
0.6	0.97	1.2	1.6	2.3	2.8	0.25	0.29	0.36	0.52	0.97	0.52	34	32	1.84
0.7	1.35	1.65	2.2	3.2	3.9	0.34	0.40	0.48	0.70	1.35	0.7	35	32	2.5
0.8	1.7	2.1	2.8	4.0	4.8	0.45	0.53	0.64	0.93	1.7	0.95	36	33	3.3
0.9	2.2	2.7	6	5.2	6.2	0.57	0.67	0.82	1.18	2.2	1.2	37	34	4.2
1.0	2.7	3.3	4.5	6.4	7.6	0.7	0.82	1.0	1.45	2.7	1.45	38	35	5.1
1.5	6.0	7.3	10.0	14.0	17.0	1.6	1.9	2.3	3.3	6.0	3.3	47	40	11.5
2.0	11.0	14.0	18.0	26.0	31.0	2.8	3.3	4.0	5.8	11.0	5.8	61	48	20.4
2.5	17.0	21.0	28.0	40.0	48.0	4.4	5.2	6.3	9.1	17.0	9.1	78	58	32.0
3.0	25.0	30.0	41.0	60.0	70.0	6.3	7.4	9.0	13.0	25.0	13.0	100	71	46.0
3.5	33.0	40.0	55.0	78.0	93.0	8.5	10.0	12.0	18.0	33.0	18.0	123	85	62.0
4.0	43.0	52.0	70.0	100.0	120.0	11.0	13.0	16.0	23.0	42.0	23.0	150	100	82.0
4.5	55.0	67.0	90.0	130.0	160.0	14.0	21.0	26.0	37.0	55.0	37.0	190	120	103.0
5.0	67.0	82.0	110.0	160.0	190.0	18.0	29.0	36.0	52.0	67.0	52.0	220	140	127.0

v = water speed in metres per second
d = tube diameter in metres
h = head loss in centimetres of water column for each metre of pipe calculated using the Lang formula:

$$h = \lambda \times \frac{100}{d} \times \frac{v^2}{2g} \qquad \lambda = 0.02 + \frac{0.0018}{\sqrt{v \times d}}$$

Head loss in bends is only due to the contraction of the liquid flow from the direction change (the development of the bends should be included in the length of the pipe) while the loss of head in the valves and shutters was determined by technical tests.
Head loss from shutters and normal bends is equal to that of 5 metres of straight pipe while for check and clapet valves it is equal to 15 metres.
The values indicated are for completely smooth internal wall pipe. In the event of encrustation, the following increases should be considered.

STEAM TENSION AND SPECIFIC WEIGHT OF WATER AS A FUNCTION OF THE TEMPERATURE

STEAM TENSION (pV)

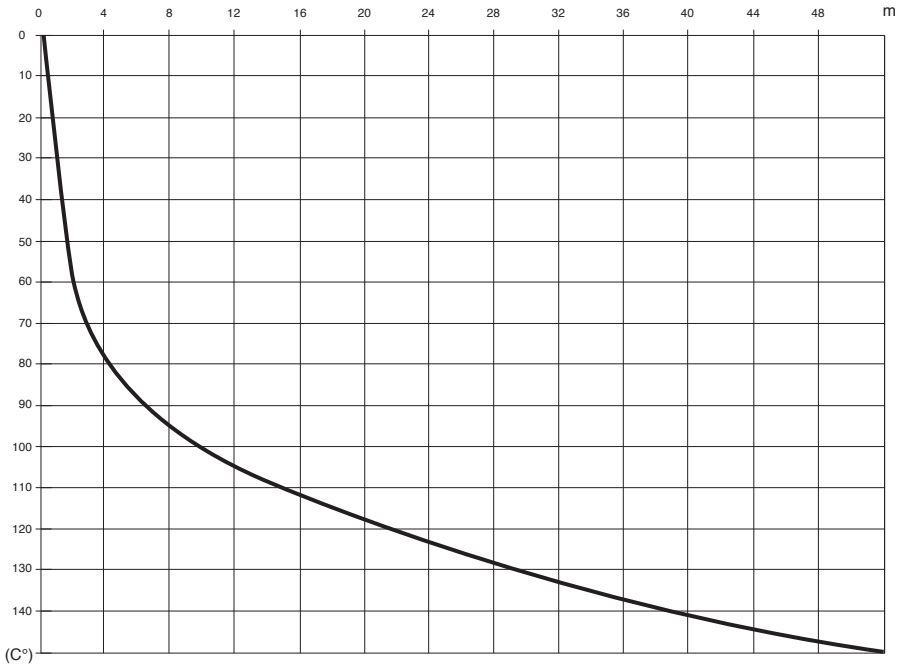

C°	m
10	0.121
20	0.22
30	0.387
40	0.675
50	1.147
60	1.888
70	3.014
80	4.67
90	7.035
100	10.33
110	14.83
120	20.85
130	28.744
140	38.97
150	52

$$\frac{Pb}{Y\ 4°} - \frac{(Pb-Pv)}{Y\ t}$$

Pb e Pv in mCA

BAROMETRIC PRESSURE (pb)

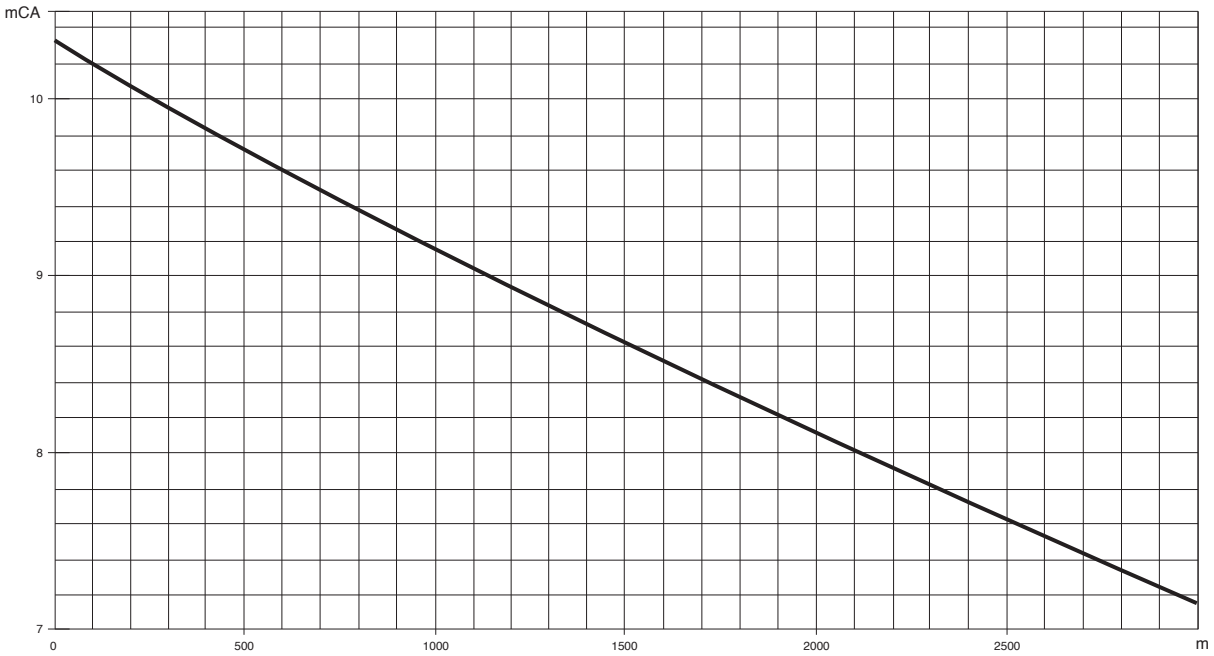

DAB PUMPS reserve the right to make modifications without prior notice

UNITS OF MEASURE CONVERSION TABLE

SIZE	SYSTEM UNITS OF MEASURE	UNITS OF MEASURE	SYMBOL	CONVERSIONS		
				TECHNICAL SYSTEM	INTERNATIONAL SYSTEM (SI)	ENGLISH SYSTEM
LENGTH	Technical and International	metre decimetre centimetre millimetre	m dm cm mm	1 dm = 0.1 m 1 cm = 0,01 m 1 mm = 0.001 m		1 m = 3.28 ft 1 dm = 3.937 in 1 cm = 0.3937 in
	English	inch foot yard	1", in 1', ft yd	1" = 25.4 mm 1" ft = 0.3048 m 1 yd = 0.9144 m		1 ft = 12" 1 yd = 3 ft = 26"
SURFACE AREA	Technical and International	square metre square centimetre square millimetre	m^2 cm^2 mm^2	1cm2 = 0,0001 m^2 1 mm2 = 0.01 cm^2		1m^2 = 1.196 sq.yd 1m^2 = 10.764 sq.ft 1 cm^2 = 0.155 sq.in
	English	square inch square foot square yard	sq. in sq. ft sq. yd	1 sq.in = 6,45 cm^2 1 sq.ft = 0,0929 m^2 1 sq.yd = 0,836 m^2		1 sq.ft = 144 sq.in 1 sq.yd = 1.296 sq.in 1 sq.yd = 9 sq.ft
VOLUME	Technical and International	cubic metre cubic decimetre cubic centimetre litre	m^3 cm^3 mm^3 l	1 m^3 = 1.000 dm^3 1 cm^3 = 0.001 m = 1.000 cm^3 1 mm^3 = 0.001 dm^3 1 l = dm^3		1 dm^3 = 0.22 Imp. gal 1 dm^3 = 0.264 US. gal 1 dm^3 = 61,0 cu.in
	English	cubic inch cubic foot Imp. gallon US gallon	cu. in cu. ft Imp. gal US gal	1 sq.in = 16.39 cm^3 1 cu.ft = 28,34 m^3 1 Imp.gal = 4.546 m^3 1 US.gal = 3.785 dm^3		1 Imp.gal = 1.201 US.gal 1 US.gal = 0.833 Imp.gal
TEMPERATURE	Technical and International	degrees centigrade degrees Kelvin	°C °K	°C = °K-273 °K = °C + 273		°C = 5/9 x (°F - 32) °K = 5/9 x (°F - 32) + 273
	English	degrees Fahreinheit	°F	°F = 9/5 x °C + 32		–
	Freezing point of water at atmospheric pressure: Boiling point of water at atmospheric pressure:			000°C = 273 °K = 032 °F 100°C = 373 °K = 212 °F		
WEIGHT e FORCE	Technical	kilogram	kg	–	1 kg = 9.81 N	1 kg = 2.203 lb
	International	Newtons	N	1 N = 0.102 kg	–	1 N = 0.22546 lb
	English	pound	lb	1 lb = 0.454 kg	1 lb = 4.452 N	–
WEIGHT SPECIFIC	Technical	kilogram per cubic decimetre	kg/dm^3	–	1 kg/dm^3 = 9.807 N/dm^3	1 kg/dm^3 = 62,46 lb/cu.ft
	International	Newton over cubic decimetre	N/dm^3	1 N/dm^3 = 0.102 kg/dm^3	–	1 N/dm^3 = 6.36 lb/cu.ft
	English	pound per cubic foot	lb/dm^3	1 lb/cu.ft = 0.01600 kg/dm^3	1 lb/cu.ft = 0160 N/dm^3	–
PRESSURE	Technical	technical atmosphere	kg/cm^2	–	1 kg/cm^2 = 98,067 kPa 1 kg/cm^2 = 0,9807 bar	1 kg/cm^2 = 14.22 psi
	International	Pascal kiloPascal bar	Pa kPa bar	1 kPa = 0,0102 kg/cm^2 1 bar = 1.02 kg/cm^2	1 kPa = 1.000 Pa 1 bar = 100.000 Pa	1 kPa = 0,145 psi 1 bar = 14,50 psi
	English	pound per square inch	psi	1 psi = 0,0703 kg/cm^2	1 psi = 0,06895 bar 1 psi = 6,894 kPa	–
FLOW RATE	Technical	litres per minute litres per second cubic metres per hour	l/min l/s m^3/h	1 l/min = 0.0167 l/s 1 l/s = 3.6 m^3/h 1 m^3/h = 16,667 l/min	1 l/s = 0,001 m^3/s	1 l/min = 0,22 imp.g.p.m. 1 l/min = 0,264 US.g.p.m. 1 m^3/h = 3,666 imp.g.p.m. 1 m^3/h = 4.403 US.g.p.m.
	International	cubic metres per second	m^3/s	1 m^3/s = 1.000 l/s 1 m^3/s = 3.600 m^3/h	–	1 m^3/s = 13.198 imp.g.p.m. 1 m^3/s = 15.852 US.g.p.m.
	English	Imperial gallon per minute US gallon per minute	Imp.g.p.m. US.g.p.m.	1 Imp.g.p.m. = 4.546 l/min 1 Imp.g.p.m. = 0,273 m^3/h 1 US.g.p.m. = 3,785 l/min 1 US.g.p.m. = 0.227 m^3/h	–	1 Imp.g.p.m. = 1.201 US.g.p.m. 1 US.g.p.m. = 0.833 Imp.g.p.m.
TORQUE MOMENT	Technical	kilogram per metre	kgm	–	1 kg = 9.807 Nm	1 kgm = 7,233 ft.lb
	International	Newton per metre	Nm	1 Nm = 0.102 kg	–	1 Nm = 0,7376 ft.lb
	English	foot pound	ft.lb	1 ft.lb = 0.138 kg	1 ft.lb = 1,358 Nm	–
WORK ed ENERGY	Technical	kilogram per metre horsepower per hour	kgm CVh		1 kg = 9.807 J 1 CVh = 0,736 kWh	1 kgm = 7,233 ft.lb 1 Nm = 0,986 HP.hr.
	International	Joule kilowatt hour	J kWhq	1 J = 0.102 kg kWh = 1,36 CVh	–	1 Nm = 0,7376 ft.lb 1 Nm = 0,7376 ft.lb
	English	foot pound Horsepower hour	ft.lb HP.hr.	1 ft.lb = 0.138 kg 1 HP.hr. = 1,014 CVh	1 ft.lb = 0.358 Nm 1 HP.hr. = 0.746 kWh	–
POWER	Technical	Horsepower	HP	1 HP = 0.736 kW	1 HP = 736 W	–
	International	Watts kiloWatts	W kW	1 W = 0.00136 Hp 1 kW = 1.36 Hp	1 kW = 1.000 W	–
KINEMATIC VISCOSITY	Technical	stokes centistokes	1 St 1 cSt	1 St = 1 cm^2/s 1 cSt = 0,01 St	1 St = 0,0001 m^2/s	1 St = 0.00107 ft^2/s
	International	m^2/s	m^2/s	1 m^2/s = 10.000 St	1 m^2/s = 10.000 cm^2/s	1 m^2/s = 10,764 ft^2/s
	English	square feet per second	ft^2/s	1 ft^2/s = 929 St	1 ft^2/s = 0,0929 m^2/s	–

NOTES

DAB PUMPS reserve the right to make modifications without prior notice

FSC
www.fsc.org
MIX
Paper from
responsible sources
FSC® C041300

Via Marco Polo, 14 - 35035 Mestrino (PD) Italy - Tel. +39.049.5125000 - Fax +39.049.5125950
www.dabpumps.com

PUMPS SELECTOR

On-line product selection

DAB PUMPS LTD.
6 Gilberd Court
Newcomen Way
Severalls Business Park
Colchester
Essex
CO4 9WN - UK
salesuk@dwtgroup.com
Tel. +44 0333 777 5010

DAB PUMPS BV
'tHofveld 6 C1
1702 Groot Bijgaarden - Belgium
info.belgium@dwtgroup.com
Tel. +32 2 4668353

DAB PUMPS B.V.
Albert Einsteinweg, 4
5151 DL Drunen - Nederland
info.netherlands@dwtgroup.com
Tel. +31 416 387280
Fax +31 416 387299

DAB PUMPS GMBH
Am Nordpark 3
D - 41069 Mönchengladbach - Germany
info.germany@dwtgroup.com
Tel. +49 2161 47388-0
Fax +49 2161 47388-36

DAB PUMPS IBERICA S.L.
Calle Verano 18-20-22
28850 - Torrejón de Ardoz - Madrid
Spain
Info.spain@dwtgroup.com
Tel. +34 91 6569545
Fax: + 34 91 6569676

DAB PUMPS HUNGARY KFT.
H-8800
Nagykanizsa, Buda Ernő u.5
Hungary
Tel. +36 93501700

DAB PUMPS POLAND Sp. z o.o.
Ul. Janka Muzykanta 60
02-188 Warszawa - Poland
polska@dabpumps.com.pl

OOO DAB PUMPS
Novgorodskaya str. 1, block G
office 308, 127247, Moscow - Russia
info.russia@dwtgroup.com
Tel. +7 495 122 0035
Fax +7 495 122 0036

DAB PUMPS INC.
3226 Benchmark Drive
Ladson, SC 29456 - USA
info.usa@dwtgroup.com
Tel. 1- 843-797-5002
Fax 1-843-797-3366

DAB PUMPS SOUTH AFRICA (PTY) LTD
Twenty One industrial Estate,
16 Purlin Street, Unit B, Warehouse 4
Olifantsfontein -1666 - South Africa
info.sa@dwtgroup.com
Tel. +27 12 361 3997

DAB PUMPS (QINGDAO) CO. LTD.
No.40 Kaituo Road, Qingdao Economic & Technological
Development Zone
Qingdao City, Shandong Province - China
PC: 266500
sales.cn@dwtgroup.com
Tel. +86 400 186 8280
Fax +86 53286812210

DAB PUMPS DE MÉXICO, S.A. DE C.V.
Av Amsterdam 101 Local 4
Col. Hipódromo Condesa,
Del. Cuauhtémoc CP 06170
Ciudad de México
Tel. +52 55 6719 0493

DAB PUMPS OCEANIA PTY LTD
426 South Gippsland Hwy,
Dandenong South VIC 3175 – Australia
info.oceania@dwtgroup.com
Tel. +61 1300 373 677

PT DAB PUMPS INDONESIA
Satrio Tower lantai 26
unit C-D, Jl. Prof. Dr. Satrio Kav. C4,
Kel. Kuningan Timur, Kec. Setiabudi, Kota Adm.
Jakarta Selatan, Prov. DKI Jakarta. - Indonesia
Tel. +62 2129222850

60171418 - 05/2021